MIRANDA
water technologies



SMARTCELL™

Miracell® Wastewater Treatment Plant

Cold Climate: Canadian Version

V1.0 | JULY 2026
Operations & Maintenance Manual

PREPARED BY:
Miranda Water Technologies

Version Control and Use of This Manual

Revision	Date	Description	Prepared For
V1.0	July 2026	Draft Version of the Canadianized version of the SmartCell™ Modular Waste Water Treatment System	Internal Review

This Operation and Maintenance Manual is generic in nature and covers all of the general aspects of the deployment of the SmartCell™ MIRACELL® Modular wastewater system.

The manual incorporates project-specific design information, process descriptions, equipment data sheets, instrumentation information, control system documentation, and manufacturer-supplied technical references available at the time of issue.

This manual should be maintained as a living document. Future equipment changes, process modifications, operational improvements, engineering updates, or revisions to operating procedures should be documented through the Version Control table and incorporated into subsequent releases of the manual.

This manual is intended to support facility operators, maintenance personnel, engineers, and authorized representatives responsible for operating and maintaining the wastewater treatment system. It should be kept readily accessible and reviewed regularly to ensure continued safe and effective system performance.

© 2026 Miranda Water Technologies. All rights reserved.



Disclaimer and Copyright Notice

This Operation and Maintenance Manual has been prepared for the use of the owner and authorized operators of the MIRACELL® Modular Wastewater Treatment Plant. The information contained herein is intended to provide general guidance for the operation, monitoring, inspection, and maintenance of the treatment system.

All installation, commissioning, operation, maintenance, repair, and servicing activities must be performed by appropriately trained personnel and in accordance with all applicable federal, provincial, territorial, state, and local regulations, permits, codes, and industry standards.

While every effort has been made to ensure the accuracy of the information contained in this manual, Miranda Water Technologies makes no representations or warranties, express or implied, regarding the completeness, accuracy, suitability, or applicability of the information provided. Site conditions, operating requirements, and regulatory obligations may vary and may require additional professional review or site-specific procedures.

Miranda Water Technologies shall not be liable for any injury, death, property damage, environmental impact, equipment damage, loss of production, loss of revenue, regulatory non-compliance, or any direct, indirect, incidental, consequential, or special damages arising from the use of this manual or from the installation, operation, maintenance, modification, or misuse of the equipment described herein.

Users are responsible for ensuring that all work is performed safely and in accordance with applicable regulations, permit requirements, manufacturer recommendations, and accepted industry practices. Failure to follow approved operating and maintenance procedures may result in equipment damage, reduced system performance, environmental harm, or personal injury.

© 2026 Miranda Water Technologies. All rights reserved.

Copyright Notice

This manual contains original content developed by Miranda Water Technologies, including system descriptions, operational procedures, maintenance guidance, process information, drawings, and project-specific documentation.

Certain materials contained within this manual, including equipment data sheets, manufacturer specifications, product literature, operating instructions, technical drawings, performance curves, and related documentation, remain the intellectual property of their respective manufacturers and rights holders and are included for reference and operational purposes only.

All Miranda Water Technologies content is protected by applicable copyright, trademark, and intellectual property laws. No portion of the Miranda Water Technologies content may be reproduced, distributed, transmitted, stored in a retrieval system, translated, or reproduced in any form or by any means without the prior written consent of Miranda Water Technologies, except for internal operational use by the owner of the facility identified in this manual.

The inclusion of third-party materials does not transfer ownership of such materials to Miranda Water Technologies or to the user of this manual. Any reproduction, distribution, or use of third-party content beyond the intended operation and maintenance of the facility may require permission from the applicable rights holder.

MIRACELL® and SmartCell™ are registered trademarks of Miranda Water Technologies.

© 2026 Miranda Water Technologies. All Rights Reserved. Third-party trademarks, product names, and technical materials remain the property of their respective owners.

© 2026 Miranda Water Technologies. All rights reserved.

Table of Contents

1. Scope and Project Basis **11**
1.1 Project Design 11
1.2 Equipment Selection & Effluent Requirements 12
1.2.1 Typical Effluent Requirements 12
1.2.2 Denitrification Performance 13
1.2.3 System Provided 13
2. Safety **14**
2.1 Purpose 14
2.2 General Safety Requirements 14
2.3 Personal Protective Equipment (PPE) 14
2.3.1 Standard Operations 14
2.3.2 Maintenance Activities 15
2.3.3 Wastewater Contact 15
2.4 Biological Hazards 15
2.5 Mechanical Hazards – RBC Equipment 15
2.6 Electrical Safety 16
2.7 Chemical Safety 16
2.7.1 Chemical Handling Requirements 17
2.7.2 Chemical Compatibility 17
2.7.3 Storage Requirements 18
2.7.4 Emergency Response 19
2.7.5 Safety Data Sheets (SDS) 19
2.8 Emergency Shutdown Procedures 19
2.9 Lockout / Tagout (LOTO) 20
2.10 Confined Space Awareness 20
2.11 Safe Restart Following Maintenance 21
2.12 Safety Responsibility 21
2.13 Emergency Power Failure and Process Recovery 21
2.13.1 Purpose 21
2.13.2 Immediate Actions Following a Power Failure 22
2.13.3 Biological Response to Power Failure 22
2.13.4 Expected Process Performance 23
2.13.5 Restart Following Power Restoration 23
2.13.6 Post-Restart Monitoring 24
2.13.7 Generator Operation 24
2.13.8 Operator Notes 25
3. Process Description **26**

© 2026 Miranda Water Technologies. All rights reserved.

3.1 P&ID Diagram 27
3.2 Process Narrative 27
3.2.1 Overview 27
3.2.2 Primary Settling Tank (PST) 28
3.2.3 Denitrification Tank 28
3.2.4 Equalization Tank (EQ) 28
3.2.5 Rotating Biological Contactor (RBC) Train 29
3.2.6 Lamella Clarifier 29
3.2.7 UV Disinfection – Stage 1 (UV1) 29
3.2.8 Treated Water Tank 29
3.2.9 Sand Filtration 30
3.2.10 Ultrafiltration (UF) System 30
3.2.11 UV Disinfection – Stage 2 (UV2) 30
3.2.12 Filtered Water Tank 30
3.2.13 Sludge Handling and Thickening 30
3.2.14 SmartCell™ Instrumentation and Control 31
3.2.15 Cold Weather Operation 31
3.2.16 Seasonal Loading Considerations 35
3.3 Hydraulic Profile 40
3.3.1 Purpose 40
3.3.2 Hydraulic Flow Path 40
3.3.3 Hydraulic Control Philosophy 41
3.3.4 Process Water Levels 41
3.3.5 Internal Recycle Streams 42
3.3.6 Pumped and Gravity Flow Sections 42
3.3.7 SmartCell™ Hydraulic Monitoring 43
3.3.8 Hydraulic Profile Drawing 43
3.3.9 Operator Considerations 44
3.3.10 Hydraulic Profile Drawing 44
3.4 Waste Management Summary 45
3.4.1 Purpose 45
3.4.2 Primary Sludge 46
3.4.3 Biological Sludge 46
3.4.4 Lamella Clarifier Sludge 46
3.4.5 Filter Backwash Waste Streams 46
3.4.6 Sludge Thickening and Decant Return 47
3.4.7 Sludge Storage and Disposal 47
3.4.8 Final Effluent 47
3.4.9 Waste Minimization Strategy 48
3.5 Tank Sizes 48

© 2026 Miranda Water Technologies. All rights reserved.

3.6 Equipment Clearances 49
3.7 Equipment Electrical Demand 50
4. Equipment List and Tagging 52
5. Normal Operation of the System 54
5.1 MIRACELL® Motor with Gearbox 54
5.2 Process Performance Expectations 56
5.2.1 General 56
5.2.2 MIRACELL® Biological Media 56
5.2.3 Biological Sloughing 57
5.2.4 Lamella Clarifier Performance 57
5.2.5 Sand Filter Performance (MIRACELL® Plus or Ultra Version) 58
5.2.6 Ultrafiltration System Performance (MIRACELL® Ultra Version) 58
5.2.7 UV Disinfection Performance 58
5.2.8 Sludge Production 59
5.2.9 Typical Biological Observations 59
5.2.10 Chemical Usage Sample (Monthly Volume) 60
5.2.11 Conditions Requiring Investigation 61
5.2.12 Performance Monitoring 61
5.2.13 Operator Best Practices 62
5.3 Process Optimization 62
5.3.1 General 62
5.3.2 Process Stability 62
5.3.3 Biological Process Optimization 63
5.3.4 Clarifier Optimization 63
5.3.5 Filtration Optimization 63
5.3.6 UV Disinfection Optimization 64
5.3.7 Energy Optimization 64
5.3.8 Seasonal Optimization 64
5.3.9 Process Optimization Guide 65
5.3.10 Best Practices 65
5.4 Extended Shutdown and Restart Procedure 66
5.4.1 General 66
5.4.2 Planned Shutdown 66
5.4.3 Biological Considerations 66
5.4.4 Restart Inspection 67
5.4.5 Restart Sequence 67
5.4.6 Post-Restart Monitoring 68
5.4.7 Biological Recovery 68
5.4.8 Documentation 68
6. Pump Systems – Overview 70
6.1 Pump Operating Notes Applicable to All Project Pumps 71

© 2026 Miranda Water Technologies. All rights reserved.

6.2 P-101 / P-102 Wastewater Feed Pumps 72
6.3 P-101 / P-102 Troubleshooting and Maintenance 74
6.4 P-103 / P-104 Sand Filter and Ultrafiltration Feed Pumps 74
6.5 P-103 / P-104 Operating and Troubleshooting Notes 77
6.6 P-105 / P-106 Ultrafiltration Backwash Pumps 77
6.7 P-105 / P-106 UF Backwash Troubleshooting 80
6.8 P-107 Clarifier Wash Pump 80
6.9 P-107 Clarifier Wash Pump Operating Notes 82
6.10 MX 101 Denitrification Tank Mixer 83
7. BL-101 Republic 4RC620 UF System Blower 85
7.1 BL-101 Operating and Maintenance Guidance 87
8. Pressure Instrumentation 90
8.1 Danfoss MBS 1700 / MBS 1750 Pressure Transmitter 90
8.1 Pressure Instrument Troubleshooting 91
8.2 Instrument Verification and Calibration 92
8.2.1 General 92
8.2.2 SmartCell™ Instrument Monitoring 92
8.2.3 Calibration Philosophy 93
8.2.4 Recommended Calibration Schedule 93
8.2.5 SmartCell™ Diagnostics 94
8.2.6 Laboratory Verification 94
8.2.7 Calibration Records 95
8.2.8 Operator Recommendations 95
9. Preventive Maintenance Program 96
9.1 General 96
9.2 Pump Maintenance Details 96
9.3 UF Blower Maintenance Details 97
10. Operator Logs and Inspection Forms 98
11. Troubleshooting - Integrated Pump, Blower, and Pressure System 99
11.1 Troubleshooting Tables by Equipment 99
12. Spare Parts and Critical Inventory 101
13. Commissioning and Baseline Verification - Pumps, Blower, and Pressure Devices 102
13.1 Baseline Readings Form 103
14. Pump Operating Philosophy by Process Area 104
14.1 Pump Protection and Alarm Philosophy 104
15. Detailed Pump Inspection Procedure 106
15.1 Field Indicators of Pump Wear or Blockage 106
16. UF Backwash Reliability Notes 108
17. Pressure Reading Interpretation Guide 109
18. Pump and Blower Training Notes 110

© 2026 Miranda Water Technologies. All rights reserved.

19. Extended Field Forms - Pump and Blower Rounds **111**
19.1 Daily Pump Round Sheet 111
19.2 Weekly Duty / Standby Pump Exercise Sheet 112
19.3 UF Backwash and Blower Performance Log 112
19.4 Pressure Instrument Calibration / Function Check Log 113
20. Ultrafiltration System 114
20.1.General Specifications 114
20.2 Operating Conditions 114
20.3 Operating and Start-Up Guidelines 116
20.4 Documentation of Operating Conditions 117
20.5 Membrane Downtime Conditions 118
20.6. Electrical Panel 119
20.7. General Notes about the Use of Electrical Equipment 119
20.8. General Safety Rules 119
21. Frequently Asked Questions (FAQ) 120
Appendix A - Sample Equipment Data Sheets and Integration Notes **128**
A.0 Purpose of This Appendix 128
A.1 Guidance for Operators, Designers, and Reviewers 128
A.2 Project-Specific Equipment Data Sheets 128
A.1 MIRACELL® Rotating Biological Contactor **129**
A.2 Lamella Clarifier CL-101 130
A.3 Automated Sand Filter SF-101 132
A.4 Wastewater Feed Pumps P-101 / P-102 133
A.5 Sand Filter / UF Feed and Backwash Pumps P-103 / P-104 / P-105 / P-106 135
A.6 Clarifier Wash Pump P-107 136
A.7 UF Backwash Blower BL-101 137
A.8 Ultrafiltration Skid UF-101 139
A.9 UV Sterilizers UV-101 / UV-102 140
A.10 Electric Actuated Butterfly and Ball Valves AV-101 to AV-127 141
A.11 Pressure Indicators PI-101 / PI-102 / PI-103 143
A.12 Pressure Switches PS-101 / PS-102 / PS-103 144
A.13 Chemical Dosing Pumps P-108 to P-112 146
A.14 Additional Integration Notes for Final O&M Issue 148
Appendix B - Pump Curves / Manuals **148**
B.1 P-101 / P-102 Wastewater Feed Pump Curve 148
B.2 P-103 / P-104 Sand Filter and UF Feed Pump Curve 149
B.3 P-105 / P-106 UF Backwash Pump Curve 150
B.4 P-107 Clarifier Wash Pump Curve 151
Appendix C - Republic 4RC620 Blower Datasheet **153**
C.1 Republic 4RC620 Blower Datasheet Page 1 153

© 2026 Miranda Water Technologies. All rights reserved.

C.2 Republic 4RC620 Blower Datasheet Page 2 154
Appendix D - Pressure Transmitter Reference 155
D.1 Danfoss MBS 1700 / 1750 Page 1 155
D.2 Danfoss MBS 1700 / 1750 Page 2 156
D.3 Danfoss MBS 1700 / 1750 Page 3 157
D.4 Danfoss MBS 1700 / 1750 Page 4 158
D.5 Danfoss MBS 1700 / 1750 Page 5 159
Appendix E - Process and UF Arrangement Figures 163
E.1 UF Process Design Summary 163
E.2 Sand Filter Arrangement and Valve Table 164
E.3 SAND + UF Assembly View 1 165
E.4 SAND + UF Assembly View 2 165
E.5 Project P&I; Diagram 165
Appendix F - Electrical Diagrams 166
F.1 Purpose 166
F.2 Building Electrical Service and Distribution 167
F.3 SmartCell™ Main Control Panel 167
F.4 MIRACELL® Process Control Panel 167
F.5 Sand Filter and Ultra Filtration (UF) Control Panel 168
F.6 UV Disinfection Control Panel(s) 168
F.7 SmartCell™ Network and Communications Architecture 169
Appendix G – SmartCell™ Process Automation and Alarm Philosophy 170
G.1 Purpose 170
G.2 SmartCell™ Operating Philosophy 170
G.3 Equipment Monitored and Controlled by SmartCell™ 171
G.4 Automatic Operating Philosophy 172
Appendix H – Emergency Response Procedures 173
H.1 Purpose 173
H.2 Emergency Response Priorities 173
H.3 Emergency Contact Information 173
H.4 General Emergency Response Procedure 174
H.5 Utility Power Failure 174
H.6 Pump Failure 175
H.7 High Tank Level or Overflow Risk 175
H.8 Chemical Spill or Leak 176
H.9 UV System Failure 176
H.10 Ultrafiltration System Failure (MIRACELL® Ultra) 176
H.11 MIRACELL® Drive Failure 177
H.12 Fire 177
H.13 Flooding 177
H.14 Equipment Lock-Out / Tag-Out 178

© 2026 Miranda Water Technologies. All rights reserved.

H.15 Alarm Response Philosophy 178
H.16 Incident Reporting 178
H.17 Post-Emergency Recovery 179
H.18 Operator Best Practices 179
Appendix I – Biological Process Reference Guide 180
I.1 Biological Treatment Overview 180
I.2 The Fixed-Film Process 180
I.3 Biofilm Development 181
I.4 Removal of Organic Matter (BOD) 182
I.5 Nitrification 182
I.6 Optional Denitrification 183
I.7 Biological Oxygen Demand vs Chemical Oxygen Demand 183
I.8 Sludge Production 184
I.9 Temperature Effects 184
I.10 pH Effects 185
I.11 Dissolved Oxygen 185
I.12 Hydraulic Loading 185
I.13 Organic Loading 186
I.14 Toxic Compounds 186
I.15 Common Microorganisms Found in Healthy Biofilm 186
I.16 Process Monitoring Indicators 187
I.17 Advantages of the MIRACELL® RBC Biological Process 187
Appendix J - Index 188

© 2026 Miranda Water Technologies. All rights reserved.

1. Scope and Project Basis

The purpose of this manual is to provide a comprehensive operation and maintenance reference for the plant MIRACELL® Modular Wastewater Treatment Plant. The manual is written for operating personnel, maintenance staff, engineering reviewers, equipment suppliers, and Miranda technical support personnel.

The manual describes the biological treatment process; lamella clarification; tertiary filtration; ultrafiltration; UV disinfection; pumps, blower, and pressure instruments; operating practices; maintenance procedures; inspection requirements; troubleshooting guidance; and spare parts planning. It is intended to be used together with final approved drawings, electrical schematics, equipment manuals, and the site-specific Environmental Compliance Approval requirements.

1.1 Project Design

Every wastewater project shares many common design principles; however, each installation is unique. The final design is influenced by several factors, including the number of users, the characteristics of the wastewater (such as residential, commercial, hotel, office, or industrial applications), wastewater strength, seasonal flow variations, and operating temperatures.

Each project requires a detailed process design to ensure the system consistently achieves the required effluent quality. The final configuration will also be subject to the applicable regulatory approval process, which varies by province and may be influenced by site-specific conditions, including the characteristics of the receiving environment.

Miranda wastewater treatment systems can be designed for discharge to a pond, stream, river, lake, drainage ditch, or subsurface disposal system, subject to local regulatory requirements. The intended end use of the treated effluent also affects the system design. For example, if the treated water is to be reused for fire suppression, irrigation, toilet flushing, or other non-potable applications, additional treatment processes or design considerations may be required.

The influent and effluent design criteria presented below represent a typical SmartCell™ MC100 Ultra wastewater treatment system. A standard MC100 Ultra includes two MIRACELL® Rotating Biological Contactor (RBC) modules, one Lamella Clarifier, one Sand Filter, and one Ultra Filtration (UF) system, all integrated and optimized through the SmartCell™ control platform.

These values are provided as representative design criteria only and should not be considered project-specific. Every Miranda installation is supported by a comprehensive Process Design Report (PDR), which establishes the project-specific influent assumptions, treatment processes, equipment configuration, hydraulic loading, process calculations, and guaranteed effluent performance required to meet the applicable regulatory approvals and project objectives.

© 2026 Miranda Water Technologies. All rights reserved.

Item	Project-Specific Basis
Design population	214 persons
Design flow	60 m³/day
Design flow per hour	3.3 m³/h over a 18-hour flow period
Peak flow	6.7 m³/h
Influent BOD_5	210 mg/L
Influent COD	390 mg/L
Influent TSS	210 mg/L
Influent TKN	45 mg/L
Influent total phosphorus	5 mg/L
Oil and grease	50 mg/L
Design pH	6–9
Water temperature	14°C min

The design basis establishes the expected hydraulic and organic loading to the plant. Operators should not use these values as field limits unless they are confirmed in the approved operating documents. They are included here to help the operator understand why the pumps, tanks, biological modules, filters, and UF equipment were selected.

1.2 Equipment Selection & Effluent Requirements

1.2.1 Typical Effluent Requirements

Parameter	Target Value	Unit	Standard / Basis
BOD_5	≤ 15	mg/L	Ontario secondary treatment
COD	≤ 90	mg/L	Ontario guideline
TSS	≤ 10	mg/L	Ontario secondary treatment
Total Nitrogen (TN)	≤ 10	mg/L	Nutrient-sensitive receiving water
Total Phosphorus (TP)	≤ 1	mg/L	Chemical dosing + filtration
Oil & Grease	≤ 10	mg/L	Provincial standard

© 2026 Miranda Water Technologies. All rights reserved.

pH	6 – 9	–	Discharge requirement

1.2.2 Denitrification Performance

Parameter	Value	Unit
Recirculation Rate	100	% of Q
Recirculation Flow	2.5	m^3/h
Denitrification Capacity (Cdenit)	0.13	kg NO_3-N / kg BOD_5
NO_3-N Recirculated & Denitrified	1,096.5	g NO_3-N/day
BOD_5 Consumed in Denitrification	5,482.5	g/day
BOD_5 Removal Efficiency (Denit Tank)	62	%
BOD_5 Remaining to RBC	3,361.5	g/day (56.0 mg/L)

1.2.3 System Provided

Parameter	Value	Notes
RBC Module Configuration	1 line × 2 modules	pcs
Total Modules Provided	2	pcs
Discs per Module	66	pcs
Total Discs	132	pcs
Disc Diameter	1,800	mm
Total Surface Area Provided	932	m^2
Total Module Volume	6.38	m^3
Drum Rotation Speed	3.7	rpm

© 2026 Miranda Water Technologies. All rights reserved.

2. Safety

2.1 Purpose

The purpose of this section is to establish the minimum safety requirements for personnel operating, maintaining, inspecting, or servicing the Miranda MIRACELL® Rotating Biological Contactor (RBC) Wastewater Treatment System.

Wastewater treatment equipment contains mechanical, electrical, biological, and chemical hazards that can cause injury, illness, equipment damage, or environmental releases if proper procedures are not followed. All personnel must be trained and authorized before performing any work on the system.

Safety shall always take precedence over production, maintenance schedules or operational convenience.

2.2 General Safety Requirements

All operators and maintenance personnel shall:

- Read and understand this Operations and Maintenance Manual.
- Follow all site-specific health and safety policies.
- Know the location of emergency shutoffs and isolation devices.
- Understand lockout/tagout (LOTO) procedures.
- Report unsafe conditions immediately.
- Never bypass safety devices or interlocks.
- Never enter confined spaces unless properly trained and authorized.
- Maintain good housekeeping around the treatment facility.
- Ensure all guards, covers, and access panels are properly installed before operation.

Only qualified personnel shall perform electrical work, equipment modifications, or control system adjustments.

2.3 Personal Protective Equipment (PPE)

The minimum PPE required when working around the wastewater treatment system includes:

2.3.1 Standard Operations

- CSA/ANSI approved safety glasses
- Safety footwear with slip-resistant soles
- Protective gloves appropriate for the task
- High-visibility clothing where required

© 2026 Miranda Water Technologies. All rights reserved.

- Long pants and suitable work clothing

2.3.2 Maintenance Activities

Additional PPE may include:

- Face shield
- Chemical-resistant gloves
- Chemical-resistant apron or suit
- Respiratory protection where required
- Fall protection equipment where applicable

2.3.3 Wastewater Contact

When there is potential exposure to untreated wastewater, sludge, or biological growth:

- Waterproof gloves shall be worn
- Handwashing shall occur immediately after completion of work
- Open cuts or abrasions shall be covered prior to commencing work
- Contaminated clothing shall be cleaned or replaced promptly

2.4 Biological Hazards

Wastewater contains bacteria, viruses, parasites, and other microorganisms that may cause illness.

Personnel shall:

- Avoid direct contact with wastewater whenever possible
- Avoid touching eyes, nose, or mouth while working
- Wash hands thoroughly after completing work
- Disinfect tools and equipment after exposure
- Report any illness potentially related to wastewater exposure

Food, beverages, and tobacco products shall not be consumed within process areas.

2.5 Mechanical Hazards – RBC Equipment

The Miranda RBC system contains rotating shafts, bearings, chains, couplings, gear reducers, and moving media packs.

Important Safety Rules

- Never remove guards while equipment is operating
- Never place hands, tools, or clothing near rotating equipment
- Never climb on RBC shafts, media packs, or support structures

© 2026 Miranda Water Technologies. All rights reserved.

- Do not enter process tanks while the RBC is operating
- Verify complete shutdown and isolation before performing maintenance

Loose clothing, jewelry, long hair, and other items capable of becoming entangled must be secured prior to working near rotating equipment.

2.6 Electrical Safety

The RBC system includes electrical control panels, motors, VFDs, instrumentation, pumps, and control equipment.

Electrical hazards may include:

- Electric shock
- Arc flash
- Fire
- Unexpected equipment startup

Requirements

- Only qualified personnel may access electrical panels
- Lockout/tagout procedures shall be followed before servicing equipment
- Verify zero energy before commencing work
- Never bypass circuit protection devices
- Keep electrical enclosures closed and secured
- Maintain dry working conditions around electrical equipment whenever possible

Electrical panels shall remain free of obstruction and accessible at all times.

2.7 Chemical Safety

The wastewater treatment system utilizes the following chemicals during operation:

Chemical	Typical Use	Key Hazards
Sodium Hypochlorite (NaOCl)	Disinfection of treated effluent	Strong oxidizer; corrosive; reacts with acids to release chlorine gas
Caustic Soda (Sodium Hydroxide, NaOH)	pH adjustment and alkalinity control	Highly corrosive; causes severe burns to skin and eyes
Hydrochloric Acid (HCl)	pH reduction and membrane cleaning operations	Highly corrosive; fumes may cause respiratory irritation
Sodium Metabisulfite (SMBS) (if utilized)	Dechlorination of treated effluent	Releases sulfur dioxide when mixed with acids; respiratory irritant

© 2026 Miranda Water Technologies. All rights reserved.

Alum (Aluminum Sulfate) (Optional if needed)	Coagulation and phosphorus removal	Acidic; may cause skin and eye irritation
Polyaluminum Chloride (PAC) (Optional if needed)	Coagulation and solids removal	Corrosive to eyes; may cause skin irritation
Antiscalant (Optional if needed)	Membrane fouling and scale prevention	May cause skin and eye irritation; varies by manufacturer
Polymer Solutions (Optional if needed)	Solids separation and sludge dewatering	Slippery when spilled; may cause skin and eye irritation

2.7.1 Chemical Handling Requirements

Operators shall:

- Review and understand the current Safety Data Sheet (SDS) before handling any chemical
- Wear appropriate personal protective equipment (PPE), including chemical-resistant gloves, safety glasses or face shield, protective clothing, and respiratory protection where required
- Follow approved chemical transfer and dosing procedures
- Never mix incompatible chemicals
- Ensure adequate ventilation is maintained in chemical storage and dosing areas
- Store chemicals only in designated storage areas
- Clearly label all chemical containers and transfer lines
- Immediately report and respond to spills, leaks, or unusual chemical conditions
- Follow site-specific lockout/tagout and confined space procedures when applicable

2.7.2 Chemical Compatibility

The following chemicals shall be segregated and never mixed:

- **Sodium Hypochlorite and Hydrochloric Acid**

Mixing releases toxic chlorine gas.

- **Sodium Hypochlorite and Ammonia-Containing Compounds**

Mixing releases toxic chloramine gases.

- **Sodium Hypochlorite and Sodium Metabisulfite (SMBS)**

Mixing causes rapid chlorine reduction reactions and may generate heat and irritating vapours.

- **Sodium Metabisulfite (SMBS) and Acids**

Mixing releases sulfur dioxide gas.

- **Caustic Soda and Acids**

© 2026 Miranda Water Technologies. All rights reserved.

Mixing causes violent exothermic reactions.

- **Oxidizers and Organic Materials**

May result in fire or rapid decomposition.

2.7.3 Storage Requirements

Storage Location

Excess chemical stock will be stored in the original manufacture containers and in an access controlled room separately ventilated.

Sodium Hypochlorite

- Store in a cool, dry, well-ventilated area
- Protect from direct sunlight and excessive heat
- Use corrosion-resistant storage tanks and piping
- Provide secondary containment

Caustic Soda

- Store in compatible tanks and piping systems
- Protect from moisture and contamination
- Provide secondary containment
- Maintain emergency eyewash and shower stations nearby

Hydrochloric Acid

- Store in corrosion-resistant containers
- Separate from oxidizers and hypochlorite solutions
- Provide adequate ventilation
- Provide secondary containment

Alum

- Store in compatible corrosion-resistant tanks
- Protect from contamination and freezing
- Provide secondary containment

Antiscalant

- Store according to manufacturer recommendations
- Protect from freezing and excessive heat
- Maintain original product labeling

© 2026 Miranda Water Technologies. All rights reserved.

2.7.4 Emergency Response

In the event of a chemical release:

1. Stop the source of the release if safe to do so
2. Isolate the affected area
3. Notify the Site Supervisor immediately
4. Utilize spill response equipment and procedures
5. Follow SDS first-aid and spill response instructions
6. Notify regulatory agencies as required

Emergency eyewash stations and safety shower facilities shall be maintained, inspected regularly, and remain accessible at all times where chemical handling occurs.

2.7.5 Safety Data Sheets (SDS)

Current SDS documents shall be maintained on-site and readily accessible to all operators.

The most current SDS provided by the chemical supplier shall take precedence over any information contained in this manual.

Recommended SDS documents shall be maintained for:

- Sodium Hypochlorite
- Sodium Metabisulfite (SMBS)
- Sodium Hydroxide (Caustic Soda)
- Hydrochloric Acid
- Alum (Aluminum Sulfate)
- Polyaluminum Chloride (PAC)
- Antiscalant
- Polymer Solutions

2.8 Emergency Shutdown Procedures

All operators shall be familiar with the location and operation of emergency shutdown devices.

Emergency shutdown may be required for:

- Personnel injury
- Electrical hazards
- Mechanical failure
- Flooding
- Fire
- Chemical release
- Structural damage

© 2026 Miranda Water Technologies. All rights reserved.

Emergency Shutdown Sequence

1. Activate the Emergency Stop (E-Stop) if required
2. Stop the RBC drive motor
3. Stop influent pumps if necessary
4. Isolate electrical power using designated disconnects
5. Secure chemical dosing systems
6. Notify supervisory personnel
7. Follow site emergency response procedures

Following an emergency shutdown, equipment shall not be restarted until the cause of the shutdown has been identified and corrected.

2.9 Lockout / Tagout (LOTO)

Before performing maintenance, servicing, or inspection involving moving or energized equipment:

1. Notify affected personnel
2. Shut down the equipment
3. Isolate all energy sources
4. Apply locks and tags
5. Verify zero energy condition
6. Perform required work
7. Remove tools and personnel
8. Remove locks and tags in accordance with site procedures
9. Return equipment to service

Stored energy sources may include:

- Electrical power
- Rotational energy
- Hydraulic pressure
- Pneumatic pressure
- Gravity loads

2.10 Confined Space Awareness

Certain tanks, chambers, wet wells, and process vessels may qualify as confined spaces under local regulations.

Personnel shall not enter confined spaces unless:

- Proper training has been completed

© 2026 Miranda Water Technologies. All rights reserved.

- Entry permits have been issued
- Atmospheric testing has been conducted
- Rescue procedures are in place
- Required PPE and monitoring equipment are available

Confined space entry shall comply with all applicable regulatory requirements.

2.11 Safe Restart Following Maintenance

Prior to restarting the RBC system:

- Verify lid has been closed
- Confirm all tools have been removed
- Ensure all personnel are clear of moving equipment
- Verify lockout devices have been removed
- Confirm proper liquid levels
- Inspect bearings, drive components, and couplings
- Verify alarms and safety devices are operational

The operator shall remain present during startup to monitor for abnormal noise, vibration, leakage, or equipment performance.

2.12 Safety Responsibility

Safety is the responsibility of every person working on or around the Miranda MIRACELL® RBC Wastewater Treatment System.

No task is so urgent that it cannot be completed safely.

If an unsafe condition exists, operators shall stop work immediately, secure the area, and notify supervision before proceeding.

2.13 Emergency Power Failure and Process Recovery

2.13.1 Purpose

This section provides guidance for operators during a complete or partial loss of electrical power and describes the expected biological response of the MIRACELL® Rotating Biological Contactor (RBC) Wastewater Treatment System. Although the mechanical equipment will stop operating immediately following a power outage, the biological treatment process continues for a period of time. The duration that the biological process can withstand a power interruption depends on wastewater temperature, biofilm condition, wastewater loading, and whether the biological media remains exposed to air or becomes completely submerged.

© 2026 Miranda Water Technologies. All rights reserved.

This section provides guidance for operators during a complete or partial loss of electrical power and describes the expected biological response of the MIRACELL® Rotating Biological Contactor (RBC) Wastewater Treatment System. Although the mechanical equipment will stop operating immediately following a power outage, the biological treatment process continues for a period of time. The duration that the biological process can withstand a power interruption depends on wastewater temperature, biofilm condition, wastewater loading, and whether the biological media remains exposed to air or becomes completely submerged.

Understanding the biological response to power interruptions enables operators to prioritize restoration activities, minimize treatment impacts, and safely return the treatment system to normal operation.

2.13.2 Immediate Actions Following a Power Failure

Upon loss of electrical power, operators should:

- Verify that all personnel are safe and determine the cause of the outage, if known.
- Confirm that all rotating equipment has stopped safely.
- Determine whether standby power has been initiated or whether portable generation is available.
- Record the time that power was lost.
- Minimize unnecessary influent loading where practical.
- Monitor tank levels to reduce the risk of overflow.
- Notify supervisory personnel if the outage is expected to exceed normal standby generator operating capability or if environmental compliance may be affected.

Where standby generation is provided, the MIRACELL® system should be returned to normal automatic operation as soon as stable electrical power has been restored.

2.13.3 Biological Response to Power Failure

Unlike suspended growth activated sludge systems, the MIRACELL® RBC process utilizes an attached biofilm that remains fixed to the resulting media. As a result, the biological population is generally more resilient to short-duration power interruptions. During a power outage, the biological microorganisms continue to consume oxygen and organic matter until the available oxygen is depleted.

If the biological media remain partially exposed to air and retain moisture, the biofilm can survive considerably longer than if the media become completely submerged without rotation. Nitrifying bacteria are generally more sensitive to oxygen depletion than carbon-removing bacteria and are therefore typically affected first during extended outages.

The approximate biological response is summarized below.

Condition	Estimated Biological Survival Time
Discs stopped – Biofilm exposed to air and remaining moist	12–24 hours

© 2026 Miranda Water Technologies. All rights reserved.

Discs stopped – Biofilm completely submerged	2–8 hours
Nitrification performance begins to decline	2–6 hours
Carbon removal begins to decline	8–24 hours
Ambient temperature greater than 25°C	Survival time may decrease by 30–50%
Wastewater temperature below 15°C	Survival time may increase by 30–50%, although biological recovery following restart may require additional time

The above values are intended as operational guidance only. Actual biological performance will vary depending on wastewater characteristics, influent loading, biofilm maturity, wastewater temperature, and operating history.

2.13.4 Expected Process Performance

Under typical operating conditions, the MIRACELL® biological process responds to power interruptions as follows:

Duration of Power Outage	Expected Process Impact
Less than 6 hours	Little or no measurable impact on treatment performance is normally expected.
6–12 hours	Biological activity generally remains stable. Operators should monitor the system following restart.
12–24 hours	Partial reduction in biological activity may occur. Nitrification performance may begin to decline before carbon removal.
24–48 hours	Significant reductions in biological activity may occur. Ammonia removal efficiency may decrease and additional monitoring is recommended.
Greater than 48 hours	A substantial portion of the biological population may become inactive or die. Treatment performance may require several days to approximately three weeks to fully recover depending on operating conditions.

2.13.5 Restart Following Power Restoration

After electrical power has been restored, operators should complete the following checks prior to returning the facility to automatic operation.

© 2026 Miranda Water Technologies. All rights reserved.

1. Confirm stable electrical power has been restored.
2. Inspect all electrical panels for alarms or faults.
3. Reset Emergency Stop devices where applicable.
4. Verify all pumps, motors, blowers, and rotating equipment are free to operate.
5. Confirm proper wastewater levels within all process tanks.
6. Restart equipment in accordance with the approved operating sequence.
7. Verify normal rotation of each MIRACELL® module.
8. Confirm all pumps establish normal flow and pressure.
9. Verify SmartCell™ communications and alarm functions have returned to normal.
10. Record the outage duration and any abnormal observations within the operating log.

Operators should remain on-site during initial restart and monitor equipment for abnormal vibration, noise, excessive current draw, leakage, or alarm conditions.

2.13.6 Post-Restart Monitoring

Following restoration of power, the following process parameters should be closely monitored for several days:

- Influent and effluent flow
- RBC rotational speed
- Dissolved oxygen (where installed)
- pH
- Oxidation Reduction Potential (ORP)
- Ammonia concentration
- Turbidity
- Total Suspended Solids (TSS)
- UV system status
- Filter differential pressure
- Membrane Transmembrane Pressure (TMP)

Where laboratory testing is routinely performed, additional sampling should be considered following outages exceeding approximately 24 hours.

2.13.7 Generator Operation

Where the facility is equipped with a standby generator, operators should confirm:

- Automatic Transfer Switch (ATS) operation.
- Stable generator voltage and frequency.
- Adequate fuel supply.
- Normal engine operating temperature and oil pressure.

© 2026 Miranda Water Technologies. All rights reserved.

- Proper sequencing of process equipment following transfer.

The standby generator should be exercised and inspected in accordance with the generator manufacturer's maintenance recommendations and site operating procedures.

2.13.8 Operator Notes

- Do not manually rotate the MIRACELL® shafts while personnel are inside the enclosed area.
- Avoid unnecessary process upsets immediately following restart by allowing the biological process to stabilize naturally.
- Nitrification recovery is generally slower than carbon removal recovery.
- The attached-growth MIRACELL® process is inherently more resilient to short-duration power interruptions than many suspended-growth wastewater treatment processes.
- Extended outages during periods of high wastewater temperature or unusually high organic loading may reduce biological recovery times.
- Whenever possible, prolonged power interruptions should be avoided through the use of standby generation or alternate emergency power sources.

© 2026 Miranda Water Technologies. All rights reserved.

3. Process Description

The SmartCell™ Wastewater System is arranged as a modular wastewater treatment train. Wastewater is received from the upstream collection/lifting arrangement and conveyed through primary holding and equalization, MIRACELL® rotating biological contactors, lamella clarification, sand filtration, ultrafiltration, and UV disinfection. Sludge and drainage lines return solids and waste flows to the designated sludge/holding areas as shown on the P&I diagram.

The MIRACELL® RBC portion is a fixed-film biological treatment process. Closely spaced HDPE disks are mounted on a horizontal shaft and rotate slowly while approximately 40 percent submerged. A biological film develops on the disk surfaces. As the disks rotate, the biofilm alternates between wastewater contact and exposure to atmospheric oxygen. This natural oxygen-transfer mechanism allows the RBC process to operate without process aeration blowers.

Each MIRACELL® RBC module has an estimated net oxygen demand of approximately 3.77 kg O_2/day, or 157 g O_2/hour. This is approximately equivalent to the oxygen consumption of two people performing moderate physical work. The oxygen is obtained naturally from the surrounding atmosphere as the RBC media rotates between the wastewater and air; therefore, no process aeration blower is required. The facility system includes one treatment line with two MIRACELL® modules, each providing approximately 466 m² of biological surface area.

Although the RBC biological process consumes oxygen, it obtains this oxygen directly from the surrounding atmosphere as the rotating media alternates between the wastewater and air. Accordingly, dedicated process aeration blowers are not required for the RBC system. Building ventilation should nevertheless account for the total process oxygen demand, normal occupancy requirements, worker safety and equipment heat removal.

The only blower identified for the treatment process is dedicated to UF membrane air scour and backwash service and is not used to provide oxygen to the RBC biological process.

Downstream of the RBC, the lamella clarifier removes suspended biological solids. The sand filter polishes clarified effluent and reduces residual suspended solids and turbidity before ultrafiltration. The UF skid provides a physical membrane barrier and produces filtered water suitable for UV disinfection. The UV units provide final disinfection without chlorine dosing.

© 2026 Miranda Water Technologies. All rights reserved.

3.1 P&ID Diagram

This sample Process and Instrumentation Diagram (P&ID) illustrates a typical Miranda wastewater treatment system. A project-specific P&ID will be developed and engineered for your installation based on the approved Process Design Report (PDR), site conditions, regulatory requirements, and the final equipment configuration.

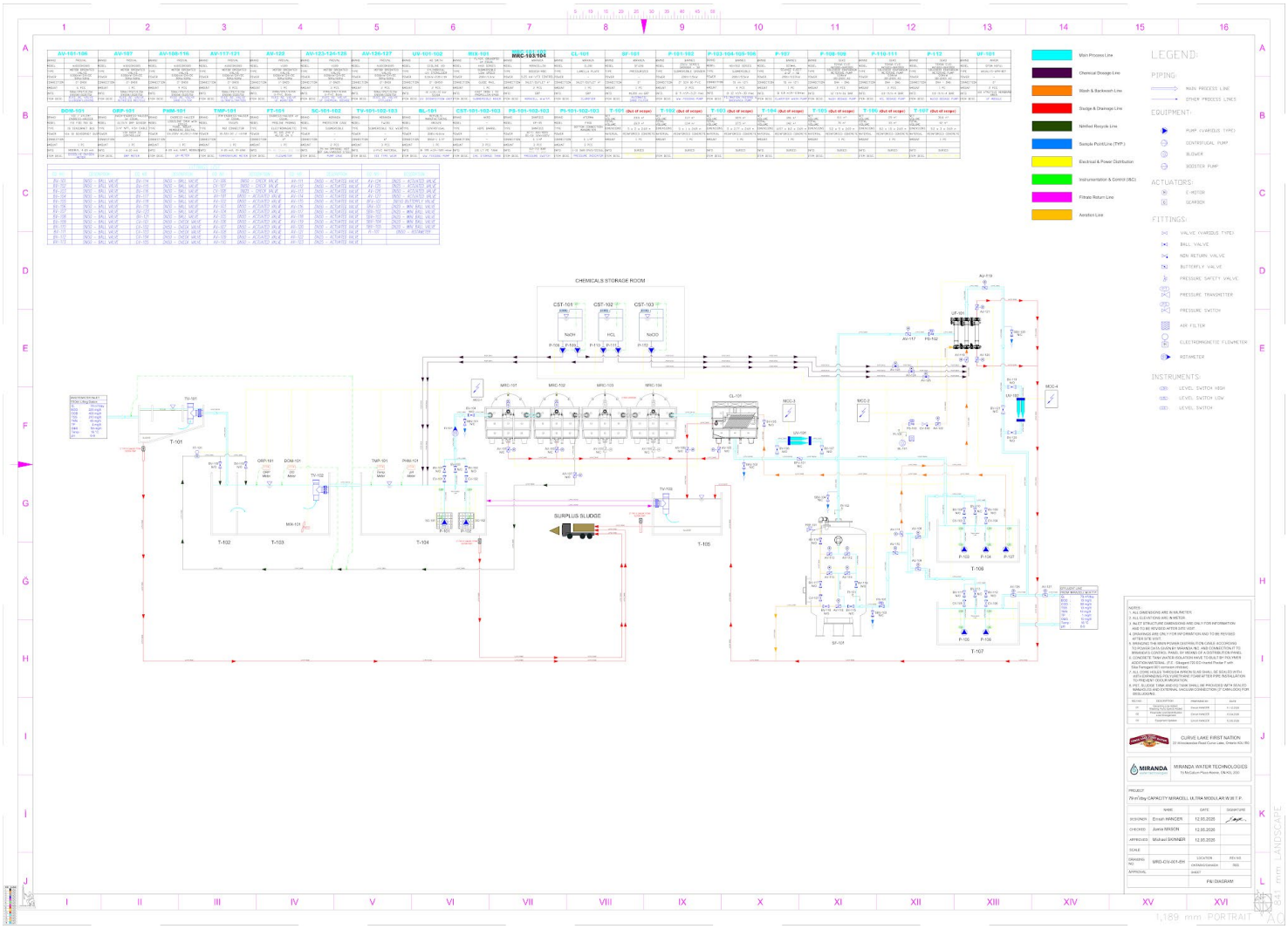

Project P&I diagram overview. Refer to the approved drawing for final tag numbers, valve states, and line sizes.

3.2 Process Narrative

3.2.1 Overview

The wastewater treatment facility is designed to treat wastewater through a combination of biological treatment, clarification, filtration, and ultraviolet disinfection processes. The treatment train is configured to

© 2026 Miranda Water Technologies. All rights reserved.

produce a high-quality effluent suitable for discharge or reuse applications while providing operational flexibility to accommodate varying influent loads and treatment requirements.

The treatment process follows the sequence below:

Primary Settling Tank (PST) → Denitrification Tank → Equalization Tank (EQ) → Rotating Biological Contactor (RBC) Train → Lamella Clarifier → UV Disinfection Unit No. 1 (UV1) → Treated Water Tank → Sand Filter → Ultrafiltration (UF) System → UV Disinfection Unit No. 2 (UV2) → Filtered Water Tank

Residual solids and process backwash streams are directed to the sludge handling system for thickening and storage.

3.2.2 Primary Settling Tank (PST)

Raw wastewater enters the Primary Settling Tank (PST), where settleable solids are removed through gravity settling. The PST reduces the solids loading to downstream biological treatment processes and improves overall treatment efficiency.

Settled solids are directed to the sludge handling system for further processing.

3.2.3 Denitrification Tank

Wastewater from the PST flows to the Denitrification Tank, where anoxic biological conditions promote the conversion of nitrate nitrogen to nitrogen gas through the denitrification process.

A controlled recirculation stream from the Lamella Clarifier returns nitrate-rich mixed liquor to the Denitrification Tank. The recirculation rate is adjusted based on treatment requirements and desired nitrogen removal performance.

The Denitrification Tank serves as the first stage of biological nutrient removal prior to aerobic treatment within the RBC Train.

3.2.4 Equalization Tank (EQ)

Following denitrification, wastewater flows to the Equalization Tank (EQ).

The Equalization Tank provides hydraulic buffering and flow balancing for the downstream treatment processes by:

- Reducing hydraulic surges
- Providing consistent loading to the RBC Train
- Improving overall treatment stability
- Accommodating variations in influent flow and wastewater strength

© 2026 Miranda Water Technologies. All rights reserved.

Decant water from the Sludge Tank is returned to the Equalization Tank through an overflow arrangement.

3.2.5 Rotating Biological Contactor (RBC) Train

Wastewater from the Equalization Tank is conveyed through the Rotating Biological Contactor (RBC) Train.

The RBC process utilizes rotating media discs that support attached biological growth. As the discs rotate through the wastewater and atmosphere, microorganisms receive both substrate and oxygen, allowing for efficient biological treatment.

The RBC Train is designed to remove:

- Biochemical Oxygen Demand (BOD)
- Total Suspended Solids (TSS)
- Ammonia Nitrogen

Biological solids generated within the RBC process are carried forward to the Lamella Clarifier for separation.

3.2.6 Lamella Clarifier

Effluent from the RBC Train enters the Lamella Clarifier, where biological solids are separated from the treated wastewater through gravity settling.

The Lamella Clarifier produces a clarified effluent stream that proceeds to the first ultraviolet disinfection stage.

Settled sludge collected within the Lamella Clarifier is directed to the Sludge Tank.

A controlled recirculation stream from the Lamella Clarifier is returned to the Denitrification Tank to support biological nutrient removal. The recirculation rate is adjusted based on process performance and treatment objectives.

3.2.7 UV Disinfection – Stage 1 (UV1)

Clarified effluent from the Lamella Clarifier passes through the first ultraviolet disinfection unit (UV1).

The UV system provides pathogen reduction without the addition of chemicals and serves as the initial disinfection barrier prior to filtration.

Following UV1 treatment, water is conveyed to the Treated Water Tank.

© 2026 Miranda Water Technologies. All rights reserved.

3.2.8 Treated Water Tank

The Treated Water Tank provides storage and hydraulic buffering between the clarification/disinfection process and the filtration systems.

The tank supplies a consistent feed flow to the downstream Sand Filter and Ultrafiltration systems.

3.2.9 Sand Filtration

Water from the Treated Water Tank is pumped through the Sand Filter system.

The Sand Filter removes fine suspended solids and residual particulate matter that may remain following clarification.

Periodic backwashing is performed to maintain filter performance. Sand Filter backwash water is directed to the Sludge Tank for solids recovery and thickening.

3.2.10 Ultrafiltration (UF) System

Filtered water from the Sand Filter is further polished through the Ultrafiltration (UF) system.

The UF membranes provide advanced solids removal and act as a physical barrier to fine particulate matter and microorganisms, producing a high-quality filtered effluent.

Periodic membrane backwashing is performed as part of normal operation. UF backwash water is directed to the Sludge Tank.

3.2.11 UV Disinfection – Stage 2 (UV2)

Following Ultrafiltration, water passes through the second ultraviolet disinfection unit (UV2).

This final disinfection stage provides an additional barrier to pathogen transmission and ensures the treated water achieves the required microbiological quality objectives.

3.2.12 Filtered Water Tank

Disinfected water from UV2 is conveyed to the Filtered Water Tank for final storage prior to discharge, reuse, or distribution.

The Filtered Water Tank serves as the final process storage point within the treatment train and provides operational flexibility for downstream system requirements.

3.2.13 Sludge Handling and Thickening

Residual solids generated throughout the treatment process are directed to the Sludge Tank.

© 2026 Miranda Water Technologies. All rights reserved.

Sources of sludge and residuals include:

- Primary Settling Tank solids
- RBC biological solids
- Lamella Clarifier sludge
- Sand Filter backwash water
- Ultrafiltration backwash water

The Sludge Tank is internally baffled to promote gravity thickening and solid concentration. As solids settle within the tank, clarified supernatant water is separated from the sludge blanket.

The Sludge Tank is designed to self-decant through an overflow arrangement, returning clarified supernatant to the Equalization Tank for retreatment.

Thickened sludge is retained for subsequent removal, hauling, or further processing as required by facility operations.

3.2.14 SmartCell™ Instrumentation and Control

The facility utilizes the SmartCell™ monitoring and control system to optimize treatment performance and provide automated process management.

The SmartCell™ system continuously monitors key operating parameters and equipment status throughout the treatment process.

Typical monitored parameters include:

- Tank levels float (Included)
- Continuous Tank Level Monitoring (Optional)
- Pump status (Included)
- RBC rotational speed (RPM) (Included)
- UV system status (Included)
- Filter differential pressures (Included)
- Backwash system operation (Included)
- Influent flow (Optional)
- Effluent flow (Optional)
- Dissolved oxygen at last RBC (Optional)
- pH at EQ (Optional)
- pH at last RBC (Optional)
- Oxidation Reduction Potential (ORP) in EQ (Optional)

The SmartCell™ system provides process monitoring, alarm management, data logging, and automatic equipment control to maintain stable treatment performance and support regulatory compliance.

3.2.15 Cold Weather Operation

© 2026 Miranda Water Technologies. All rights reserved.

General

The MIRACELL® Rotating Biological Contactor (RBC) Wastewater Treatment System has been designed for reliable operation in Canadian climates where prolonged periods of freezing temperatures are common. Although all biological wastewater treatment processes are influenced by temperature, the attached-growth nature of the MIRACELL® process provides stable biological performance over a wide range of seasonal operating conditions when the system is operated and maintained in accordance with this Operations Manual.

Biological activity naturally decreases as wastewater temperature declines. As a result, reaction rates, particularly nitrification, occur more slowly during colder months. The treatment system has been designed to accommodate these seasonal variations through appropriate biological surface area, hydraulic retention time, and process configuration.

Wastewater Temperature

Domestic wastewater normally enters the treatment facility at temperatures significantly warmer than the surrounding ambient air, even during winter conditions. This continuous inflow of relatively warm wastewater provides a substantial source of thermal energy that assists in maintaining stable biological conditions within the treatment process.

The MIRACELL® system has been engineered to provide reliable wastewater treatment at influent temperatures as low as 5°C. However, for Canadian installations, Miranda typically adopts a conservative minimum design influent temperature of 14°C to provide additional operating margin and ensure consistent year-round performance.

This design basis assumes the following:

- The wastewater treatment plant is operated in accordance with the approved Operations and Maintenance Manual.
- Hydraulic loading remains within the approved design basis.
- Organic loading does not significantly exceed the specified design criteria.
- Preventive maintenance is performed in accordance with the recommended maintenance schedule.
- The treatment building is fully enclosed, heated, and protected from freezing conditions.
- Process tanks are located beneath the treatment building, minimizing exposure to freezing temperatures.
- The sewer collection system is designed such that the typical distance from contributing residences or buildings to the treatment plant does not exceed approximately 5 km, reducing the potential for excessive wastewater cooling.
- Wastewater enters the treatment process below the local frost depth, with all inlet and outlet piping and tank penetrations installed below the frost line to minimize heat loss and prevent freezing.

© 2026 Miranda Water Technologies. All rights reserved.

- The wastewater remains in continuous flow under normal operating conditions, preventing prolonged stagnation that could contribute to freezing.

Temperatures below the design basis do not necessarily result in treatment failure but may reduce biological treatment rates and increase the time required for nitrification.

MIRACELL® FRP Construction

The MIRACELL® biological modules and lamella clarifier are manufactured from Fiberglass Reinforced Plastic (FRP), a corrosion-resistant composite material with significantly lower thermal conductivity than conventional construction materials such as steel or concrete.

The relatively low thermal conductivity of FRP reduces heat transfer between the wastewater and the surrounding environment, helping to retain wastewater temperature during cold weather operation.

Although FRP contributes to reducing heat loss, the primary factors that maintain biological operating temperature include:

- Continuous inflow of domestic wastewater
- Below-grade concrete process tanks
- Heated building enclosure
- Insulated process piping where applicable
- Continuous biological activity within the treatment process

Together, these design features assist in maintaining stable treatment performance throughout the winter operating season.

Biological Performance During Cold Weather

As wastewater temperature decreases, biological activity naturally slows.

The first biological process typically affected is nitrification, as nitrifying bacteria reproduce more slowly and require greater biological retention time than carbon-removing microorganisms.

Typical cold-weather effects may include:

- Reduced ammonia removal rates
- Slightly slower biofilm growth
- Lower biological sludge production
- Increased oxygen transfer efficiency due to colder wastewater
- Longer biological recovery following process upsets

© 2026 Miranda Water Technologies. All rights reserved.

These seasonal changes are considered normal and have been incorporated into the process design

Operator Considerations During Winter

During periods of cold weather, operators should routinely verify the following:

- Building heating systems are operating correctly
- Doors and access hatches remain closed when not required for maintenance
- Process tanks remain free of ice accumulation
- Ventilation systems continue to operate normally
- Process piping exposed to freezing temperatures remains adequately protected
- Chemical storage tanks remain within the manufacturer's recommended temperature range
- Instrumentation and level sensors remain free of ice or condensation

Any evidence of freezing should be investigated immediately before equipment damage occurs.

Power Failures During Cold Weather

Power interruptions during winter require additional attention because process equipment, building heating systems, and ventilation equipment may all be unavailable simultaneously.

Where standby power is provided, operators should verify that emergency generators restore power to all critical treatment equipment, including:

- MIRACELL® drive motors
- Influent and process pumps
- SmartCell™ control system
- UV disinfection equipment
- Ultrafiltration system (where installed)
- Building heating and ventilation systems, where applicable

Refer to **Section 2.13 – Emergency Power Failure and Process Recovery** for detailed guidance regarding biological recovery following extended power interruptions.

Seasonal Biological Expectations

The table below summarizes typical biological performance under varying wastewater temperatures.

Wastewater Temperature	Typical Biological Performance
Above 20°C	Maximum biological activity and nitrification performance.
17–20°C	Normal year-round operation with excellent treatment performance.

© 2026 Miranda Water Technologies. All rights reserved.

14–17°C	Design operating range. Slight reduction in nitrification rates may occur while maintaining effective treatment.
5°C - 14°C	Biological activity continues but treatment rates decrease. Additional monitoring of ammonia and process performance is recommended.

Best Operating Practices

To maintain reliable winter performance, operators should:

- Maintain stable hydraulic loading whenever possible
- Avoid unnecessary process shutdowns
- Keep the treatment building enclosed and heated
- Verify generator readiness throughout the winter season
- Inspect process equipment more frequently during prolonged cold weather
- Monitor ammonia concentrations and nitrification performance as wastewater temperatures decrease
- Continue routine preventive maintenance throughout the winter operating season

When operated within its design parameters, the MIRACELL® system is capable of providing reliable wastewater treatment throughout the year under Canadian climatic conditions.

3.2.16 Seasonal Loading Considerations

General

The MIRACELL® Rotating Biological Contactor (RBC) Wastewater Treatment System is designed to accommodate normal variations in hydraulic and organic loading that occur throughout the year. Unlike suspended-growth treatment systems, the attached-growth biofilm within the MIRACELL® process naturally adjusts to gradual changes in wastewater flow and organic loading while maintaining stable biological treatment performance.

Seasonal fluctuations in wastewater generation are common in many communities and may result from changes in occupancy, institutional operations, recreational activities, commercial usage, or weather conditions. Provided these changes occur within the design capacity of the treatment facility, the biological process will naturally adapt without requiring significant operator intervention.

Operators should recognize that biological treatment is a living process. Changes in wastewater flow or strength do not produce an immediate biological response. Instead, the attached microbial population gradually increases or decreases over several days as it adapts to changing operating conditions.

Seasonal Variations in Wastewater Loading

© 2026 Miranda Water Technologies. All rights reserved.

Seasonal loading variations may occur due to:

- Residential occupancy changes
- Schools and educational facilities
- Community centres
- Administrative and municipal buildings
- Recreational facilities
- Tourism and seasonal visitors
- Community events and gatherings
- Holiday periods
- Future residential or commercial development
- Extended periods of low occupancy

Each of these conditions may influence both wastewater flow and wastewater strength and should be considered when evaluating overall plant performance.

Low Flow Conditions

Extended periods of reduced wastewater flow may occur during:

- Winter occupancy reductions
- School holidays
- Summer vacations
- Extended facility closures
- Reduced community activity
- Seasonal residences with low occupancy

During periods of reduced loading:

- Organic loading to the biological process decreases
- Biofilm thickness gradually reduces
- Biological sludge production decreases
- Pump operating frequency may be reduced
- Clarifier sludge production decreases
- Biological Oxygen Demand (BOD_5) removal typically remains stable

This is considered a normal biological response. The attached biofilm naturally adjusts to the available food source while maintaining an active microbial population capable of responding when wastewater loading increases.

© 2026 Miranda Water Technologies. All rights reserved.

Operators should continue normal inspections, preventive maintenance, and laboratory monitoring during periods of reduced loading.

Increased Flow and Peak Loading

Temporary increases in wastewater flow or organic loading may occur during:

- Community celebrations
- Cultural events
- Holiday weekends
- School reopening
- Recreational events
- Seasonal occupancy increases
- Wet weather infiltration or inflow (where applicable)

The Equalization Tank is designed to minimize hydraulic fluctuations before wastewater enters the biological treatment process. The MIRACELL® system can accommodate normal fluctuations in loading; however, sustained flows exceeding the approved design basis may reduce treatment efficiency.

During periods of increased loading, operators should monitor:

- Equalization Tank levels
- Pump operating frequency
- MIRACELL® rotational speed
- Clarifier sludge blanket
- Effluent quality
- Sand filter differential pressure
- Ultrafiltration operating pressure guage
- Sludge storage capacity

Extended periods of overload should be investigated and documented.

Biological Adaptation to Changing Loads

The biological population continuously adapts to changing wastewater conditions.

As loading increases:

- Biofilm thickness gradually increases
- Biological activity increases
- Sludge production increases
- Oxygen demand increases
- Ammonia removal capacity improves as nitrifying bacteria become established

© 2026 Miranda Water Technologies. All rights reserved.

As loading decreases:

- Excess biomass naturally sloughs from the media
- Biological sludge production decreases
- Oxygen demand decreases
- The remaining attached biofilm continues treating wastewater efficiently

These biological adjustments occur naturally and should not be interpreted as abnormal process behaviour.

Unlike suspended-growth treatment systems, the MIRACELL® attached-growth process retains its biological population on the rotating media, allowing the treatment process to recover quickly following gradual changes in loading.

Shock Loading

A shock load is a sudden increase in hydraulic flow or contaminant concentration that significantly exceeds normal operating conditions.

Examples include:

- Large wastewater discharges over a short period
- High-strength commercial wastewater
- Septage or hauled wastewater
- Significant grease or oil discharges
- Chemical spills
- Industrial wastewater entering the collection system

Potential impacts include:

- Temporary reduction in treatment efficiency
- Increased suspended solids
- Reduced nitrification
- Increased clarifier solids loading
- Increased filter backwashing frequency
- Higher sludge production

Where practical, large intermittent discharges should be equalized before entering the biological treatment process.

Returning to Normal Loading

Following periods of reduced occupancy or facility closure, the biological process will naturally respond to increasing wastewater loading.

© 2026 Miranda Water Technologies. All rights reserved.

Operators should monitor:

- Influent flow
- Ammonia concentration
- BOD_5 removal
- Total Suspended Solids (TSS)
- Clarifier performance
- Sludge production
- Sand filter differential pressure
- Ultrafiltration Transmembrane Pressure (TMP), where installed
- UV system operation

Temporary increases in biological sludge production during this adjustment period are considered normal.

Depending on the duration of the reduced loading period, full biological equilibrium may require several days before maximum treatment performance is re-established.

Operator Recommendations

To maintain reliable year-round treatment performance, operators should:

- Become familiar with the seasonal loading characteristics of the specific treatment facility
- Anticipate predictable changes associated with schools, community centres, holidays, and community events
- Avoid sudden hydraulic or organic loading changes whenever practical
- Prevent unauthorized industrial or chemical discharges
- Continue preventive maintenance regardless of seasonal occupancy
- Maintain routine laboratory sampling throughout the year
- Record significant occupancy changes and unusual loading events within the operating log
- Review SmartCell™ operating trends periodically to identify recurring seasonal patterns
- Increase process monitoring during periods of rapidly changing wastewater loading

Understanding seasonal operating patterns allows operators to distinguish between normal biological adaptation and conditions requiring corrective action.

Seasonal Operating Summary

© 2026 Miranda Water Technologies. All rights reserved.

Operating Condition	Typical Biological Response	Recommended Operator Action
Reduced winter occupancy	Reduced biofilm growth and sludge production	Continue normal operation and routine monitoring.
School closures or holidays	Reduced hydraulic and organic loading	Continue preventive maintenance and monitor recovery when occupancy returns.
Community events or gatherings	Temporary increase in hydraulic and organic loading	Verify Equalization Tank operation, clarifier performance, and sludge storage capacity.
Increased summer occupancy	Increased biological activity and sludge production	Increase monitoring of clarifier performance, sludge production, and tertiary treatment equipment.
Extended low loading	Gradual reduction in biological biomass	Continue normal operation and allow the biological process to naturally adapt.
Return to normal occupancy	Gradual increase in biological activity	Monitor ammonia, BOD_5, TSS, sludge production, and overall treatment performance until stable operation is confirmed.
Shock loading	Temporary reduction in treatment efficiency	Investigate the source of the upset, increase monitoring, and document corrective actions.

3.3 Hydraulic Profile

3.3.1 Purpose

The hydraulic profile describes the movement of wastewater through the MIRACELL® Wastewater Treatment System and identifies the normal operating water levels, hydraulic control points, pumping locations, gravity flow sections, and recycle streams throughout the treatment process.

Understanding the hydraulic profile assists operators in identifying abnormal operating conditions, diagnosing flow restrictions, verifying pump operation, and understanding how each treatment stage interacts with the next.

The hydraulic profile drawing included within the project drawings should always be used as the primary engineering reference for elevations and operating water levels.

3.3.2 Hydraulic Flow Path

© 2026 Miranda Water Technologies. All rights reserved.

Wastewater enters the treatment facility through the influent sewer and is conveyed to the Primary Settlement Tank (PST) where settleable solids and floatable materials are removed. From the Primary Settlement Tank, wastewater flows by gravity to the Denitrification Tank.

The Equalization Tank serves as the hydraulic balancing point for the treatment facility. Wastewater levels within this tank are continuously monitored by the SmartCell™ Control System, which automatically controls the duty and standby influent pumps to maintain a consistent flow to the downstream treatment process.

From the Equalization Tank, wastewater is pumped to the MIRACELL® Rotating Biological Contactor (RBC) modules where biological treatment occurs. Following biological treatment, wastewater flows by gravity to the Lamella Clarifier, where biological solids are separated from the treated water and then gravity flows into the treated water tank..

Clarified wastewater then is pumped from the treated water tank to the sand filter for secondary filtration and then subsequently through the Ultrafiltration (UF) system for tertiary filtration , where it passes through the UF membranes to provide advanced solids removal. Following ultrafiltration, the treated water passes through the final UV disinfection system before entering the Filtered Water Tank for discharge or reuse.

Throughout the treatment process, hydraulic flow is maintained using a combination of gravity flow and strategically located pumping systems to minimize energy consumption while maintaining reliable process control.

3.3.3 Hydraulic Control Philosophy

The treatment process has been designed to maximize gravity flow wherever practical while using pumps only where elevation changes or process requirements make pumping necessary.

Primary hydraulic control points include:

- Equalization Tank operating level
- Duty and standby feed pump operation
- Sand Filter feed pumps
- Ultrafiltration feed and backwash pumps
- Clarifier wash pump
- Sludge transfer and recycle streams
- Final treated water discharge

SmartCell™ continuously monitors process levels and automatically adjusts equipment operation to maintain stable hydraulic conditions throughout the treatment plant.

3.3.4 Process Water Levels

© 2026 Miranda Water Technologies. All rights reserved.

Each treatment process is designed to operate within a specific normal water level range.

Normal operating levels are maintained automatically by SmartCell™ through level monitoring and automatic pump sequencing.

Abnormal water levels may indicate:

- Pump failure
- Blocked piping
- Closed isolation valves
- Instrument malfunction
- Excessive hydraulic loading
- Downstream process restrictions

Operators should investigate sustained abnormal tank levels promptly to prevent process upset or overflow conditions.

3.3.5 Internal Recycle Streams

Several internal recycle streams are incorporated into the treatment process to improve treatment efficiency and reduce waste generation.

These include:

Recycle Stream	Destination	Purpose
Sludge Tank Supernatant	Equalization Tank	Returns clarified water for retreatment
Sand Filter Backwash	Sludge Tank	Recovers solids for thickening
UF Backwash Water	Sludge Tank	Recovers membrane backwash solids
Clarifier Sludge	Sludge Tank	Biological solids thickening
Primary Sludge	Primary Sludge Storage	Temporary sludge storage prior to removal

These recycle streams are considered a normal part of plant operation and have been incorporated into the hydraulic design of the facility.

3.3.6 Pumped and Gravity Flow Sections

The treatment process has been designed to utilize gravity flow wherever possible.

Pumped Flow

© 2026 Miranda Water Technologies. All rights reserved.

The following process stages require pumping:

- Influent transfer from the Equalization Tank to the MIRACELL® modules
- Sand Filter / Ultrafiltration feed
- Ultrafiltration backwash
- Clarifier wash pump
- Chemical dosing systems

Gravity Flow

The following process stages normally operate by gravity:

- Primary Settlement Tank to Equalization Tank
- MIRACELL® to Lamella Clarifier
- Lamella Clarifier to Sand Filter
- Sludge transfer to Sludge Tank
- Sludge Tank decant return

Using gravity flow reduces electrical consumption while improving overall system reliability.

3.3.7 SmartCell™ Hydraulic Monitoring

The SmartCell™ Control System continuously monitors the hydraulic operation of the treatment facility through:

- Tank level sensors
- Pump operating status
- Pump run times
- Pump starts.
- Flow measurement (where installed)
- Alarm management

Historical trend information allows operators to identify gradual changes in hydraulic performance before treatment efficiency is affected.

3.3.8 Hydraulic Profile Drawing

The facility specific Hydraulic Profile Drawing identifies:

- Finished floor elevation
- Tank invert elevations
- Normal operating water levels
- Overflow elevations
- Process piping elevations

© 2026 Miranda Water Technologies. All rights reserved.

- Pump locations
- Gravity flow sections
- Hydraulic grade line
- Internal recycle streams

Operators should refer to the approved project drawings whenever detailed elevation or hydraulic information is required.

3.3.9 Operator Considerations

Operators should routinely observe the hydraulic operation of the treatment facility and verify that:

- Tank levels remain within their normal operating range
- Pumps cycle normally
- No evidence of hydraulic short-circuiting exists
- Gravity overflow weirs remain unobstructed
- Backwash and recycle flows occur only during their intended operating cycles
- SmartCell™ indicates stable hydraulic operation
- Overflow conditions do not occur

Abnormal hydraulic conditions should be investigated before treatment performance is affected.

3.3.10 Hydraulic Profile Drawing

The hydraulic profile shown below is a sample illustration of a typical Miranda wastewater treatment system. A detailed, project-specific Hydraulic Profile Drawing will be prepared for your installation as part of the final engineering and Process Design Report (PDR).



© 2026 Miranda Water Technologies. All rights reserved.

3.4 Waste Management Summary

3.4.1 Purpose

This section provides a summary of all liquid and solid waste streams generated by the wastewater treatment facility and describes the methods used for collection, treatment, recirculation, storage, and disposal.

The facility is designed to maximize treatment efficiency while minimizing waste generation through internal recycle streams and sludge thickening processes.

Waste Stream Summary

Waste Stream	Source	Management Method
Primary Sludge	Primary Settling Tank (PST)	Settling solids stored in Primary Settling Tank
Biological Sludge	RBC Train	Gravity to Sludge Tank for thickening and storage
Clarifier Sludge	Lamella Clarifier	Gravity to Sludge Tank for thickening and storage
Sand Filter Backwash	Sand Filtration System	Returned to Sludge Tank
UF Backwash Water	Ultrafiltration System	Returned to Sludge Tank
Sludge Tank Decant	Sludge Tank Overflow	Returned to Equalization Tank for retreatment
Treated Effluent	Filtered Water Tank	Discharged or reused in accordance with operating requirements

3.4.2 Primary Sludge

Settleable solids within the Primary Settling Tank (PST) are settled and gravity thickened.

These solids consist primarily of raw wastewater solids and inert materials removed during preliminary treatment.

3.4.3 Biological Sludge

The Rotating Biological Contactor (RBC) Train generates biological solids through microbial growth and treatment of organic contaminants. The RBC sloughs off access to microbial waste in the bottom of the RBC tank. The biological solids are periodically wasted to the sludge tank for further thickening and removal.

The Lamella Clarifier is a final clarifier separating floating solids and settling solids. Both of these solids are directed to the sludge tank for thickening and removal.

© 2026 Miranda Water Technologies. All rights reserved.

3.4.4 Lamella Clarifier Sludge

The Lamella Clarifier removes suspended biological solids from the RBC effluent.

Settled sludge is continuously or periodically transferred to the Sludge Tank for thickening and storage.

A portion of the clarifier flow may be recirculated to the Denitrification Tank to support nutrient removal and process stability.

3.4.5 Filter Backwash Waste Streams

Sand Filter Backwash

Periodic backwashing is required to remove accumulated solids from the sand filter media.

Backwash water containing suspended solids is directed to the Sludge Tank for solids recovery and thickening.

Ultrafiltration Backwash

The Ultrafiltration (UF) system performs automatic periodic backwash cycles to maintain membrane performance and optimize filtration efficiency. During each backwash cycle, treated water is pumped in reverse through the UF membranes while the dedicated UF blower provides an air scour to dislodge accumulated solids from the membrane surfaces. The resulting backwash water is directed to the Sludge Tank, where suspended solids are retained and concentrated, while clarified supernatant is recovered through the sludge tank decant system and returned to the treatment process.

3.4.6 Sludge Thickening and Decant Return

The Sludge Tank serves as the primary residuals management system for the facility.

The tank has a baffle fitting (T Weir) to prevent floating solids from transferring to the equalization tank.

As solids settle within the tank:

- Thickened sludge accumulates in the lower portion of the tank
- Clarified supernatant water rises to the surface
- Supernatant is discharged through a self-decant overflow arrangement

The decant overflow is returned to the Equalization Tank where it is reintroduced into the treatment process for retreatment.

This arrangement minimizes liquid waste discharge and maximizes process recovery.

© 2026 Miranda Water Technologies. All rights reserved.

3.4.7 Sludge Storage and Disposal

Thickened sludge is retained within the Sludge Tank until removal is required.

Sludge removal frequency will depend upon:

- Influent loading
- Solids production rates
- Plant operating conditions
- Available storage volume

Accumulated sludge shall be removed by a licensed waste hauler or managed in accordance with applicable regulatory requirements.

3.4.8 Final Effluent

Following treatment through:

- RBC Biological Treatment
- Lamella Clarification
- UV Disinfection (UV1)
- Sand Filtration
- Ultrafiltration
- UV Disinfection (UV2)

The treated effluent is stored within the Filtered Water Tank prior to discharge or reuse.

Final effluent quality shall comply with all applicable regulatory and permit requirements.

3.4.9 Waste Minimization Strategy

The facility incorporates several waste minimization measures, including:

- Internal recycle of sludge tank decant to the Equalization Tank
- Clarifier recirculation to the Denitrification Tank for nutrient removal optimization
- Gravity thickening of sludge to reduce hauling frequency and disposal costs
- Recovery of filter backwash streams through retreatment rather than direct discharge

These measures reduce overall waste generation while improving treatment efficiency and operational sustainability.

© 2026 Miranda Water Technologies. All rights reserved.

3.5 Tank Sizes

The dimensions presented below represent a typical installation designed for an initial average daily flow of approximately 60 m³/day, with the ability to expand to approximately 200 m³/day as future demand increases.

One of the key advantages of the Miranda SmartCell™ platform is its modular design. Whenever practical, we recommend sizing the civil infrastructure, including the treatment building and below-grade process tanks, with future expansion in mind. Planning for additional treatment capacity during the initial construction phase can significantly reduce future capital costs and minimize operational disruption.

It is important to note that, because the Miranda system is decentralized and fully modular, future capacity does not necessarily need to be added at a single location. Additional treatment modules can be strategically installed throughout a development to align with phased construction, geographic constraints, or separate service areas. This flexibility is a fundamental advantage of the Miranda approach and allows treatment capacity to grow in parallel with the development.

The sizing of the Primary Settling Tank (PST), Denitrification Tank, and Equalization (EQ) Tank is primarily governed by the Average Daily Flow (ADF), Peak Hourly Flow (PHF), and the hydraulic retention times required to achieve stable process performance. In Ontario, these design parameters are established in the Ministry of the Environment, Conservation and Parks (MECP) Design Guidelines for Sewage Works, which are generally considered among the most stringent wastewater design standards in Canada. Miranda's process designs are developed to satisfy these requirements, including the hydraulic and biological design criteria applicable to fixed-film treatment systems.

Because the PST, Denitrification Tank, and EQ Tank are directly influenced by peak hydraulic conditions, they often benefit from being sized for future expansion during the initial construction phase. In contrast, the Treated Water Tank and Filtered Water Tank are typically less sensitive to future plant expansion. As additional treatment modules are added, the hydraulic transfer capacity between these process stages also increases, reducing the need for proportional increases in storage volume.

While additional tanks and treatment capacity can be added after the initial installation, the most economical long-term approach is often to incorporate provisions for future expansion during the original civil design. A well-developed master plan that balances current requirements with anticipated future growth will generally provide the lowest life-cycle cost while preserving maximum flexibility for phased expansion.

Description	Type	Primary Function	Volume (L)
PST Tank	Concrete	Primary Solids Settling	22,000
EQ Tank	Concrete	Flow Equalization	126,000

© 2026 Miranda Water Technologies. All rights reserved.

MRC-101	Fibreglass	Biological Treatment	3,190
MRC-102	Fibreglass	Biological Treatment	3,190
Lamella Clarifier	Fibreglass	Secondary Solids Settling	3,170
Denitrification Tank #1	Concrete	Biological nutrient removal	12,000
Deniftrification Tank #2	Concrete	Biological nutrient removal	32,500
Treated Water	Concrete	Stores treated water pre SF	29,960
Filtered Water	Concrete	Stores filtered water post UF	36,600
Sludge Tank	Concrete	Sludge storage & thickening	61,000
Chlorine	HD Plastic	Chlorine storage	100
HCL	HD Plastic	Acid storage	100
Caustic Soda	HD Plastic	Caustic storage	100
Alum	HD Plastic	Alum Storage	100

3.6 Equipment Clearances

Description	Front	Back	Left	Right	Top
MIRACELL®, Clarifier, Control Panel Package	1.8m	1.5m	2.4m	1.3m	2m
Sand Filter and UV	1.8m	1m	1.5m	1.5m	.5m
SmartCell™	1.3m	—	2.1m	1.6m	40cm
EQ Pump	60cm	60cm	60cm	60cm	60cm
SF/UF Pumps	60cm	60cm	60cm	60cm	60cm
SF/UF Backwash Pump	60cm	60cm	60cm	60cm	60cm
Clarifier Wash Pump	60cm	60cm	60cm	60cm	60cm
UF Blower	Included inside of Sandfilter and UF Clearance				
UF Chlorine Pump	Included inside of Sandfilter and UF Clearance				
UF Acid Pump	Included inside of Sandfilter and UF Clearance				
UF Caustic Pump	Included inside of Sandfilter and UF Clearance				

3.7 Equipment Electrical Demand

The table below presents the typical electrical demand for a SmartCell™ MC100 wastewater treatment system equipped with a Sand Filter (SF) and Ultra Filtration (UF) system designed for an ultimate treatment capacity of approximately 200 m³/day.

© 2026 Miranda Water Technologies. All rights reserved.

These values are provided for preliminary planning purposes only. The final electrical demand will be confirmed during the engineering and design phase based on the project-specific equipment configuration, process requirements, utility voltage, starting methods (including VFDs where applicable), instrumentation, heating, ventilation, lighting, and any client-specific electrical loads.

A detailed electrical load analysis and single-line electrical design will be completed as part of the overall engineering process to establish the required service size, standby power requirements (if applicable), and electrical infrastructure for the installation.

Description	QTY	PH/HZ	Voltage	Amps	HP	Power (KW)
MIRACELL®	2	3PH/60HZ	208V	1.14	0.33	.5
EQ Pumps	2	3PH/60HZ	208V	8.5	2	3
SF/UF Pumps	2	3PH/60HZ	208V	17.8	5	7.5
SF/UF Backwash Pumps	2	3PH/60HZ	208V	37	20	15
Clarifier Wash Pump	1	3PH/60HZ	208V	3.2	0.5	0.4
UF Blower	1	3PH/60HZ	208V	20.8	8.8	6.75
UF Chlorine Pump	1	1PH/60HZ	120V	0.33	0.054	0.04
UF Acid Pump	1	1PH/60HZ	120V	0.33	0.054	0.04
UF Caustic Pump	1	1PH/60HZ	120V	0.33	0.054	0.04
UV	2	1PH/60HZ	120V	1	0.15	0.3
Actuator Valves	24	1PH/60HZ	24VDC	6.75	0.216	0.3
Mixer	1	3PH/60HZ	208V	3.2	1	0.8

Based on the design assumptions outlined above, the following represents a typical preliminary electrical design summary for a SmartCell™ MC100 Ultra wastewater treatment system.

Electrical Summary	Value
Incoming Electrical Service	208 VAC, 3-Phase, 60 HTZ
Total Installed Motor Power	46 HP
Total Connected Load	36 kW
Average Electrical load	15 kW
Estimated Maximum Operating Demand	27 kW
Estimated Maximum Demand Current	80 A
Connected Electrical Load	105 A
Recommended Electrical Service	208 V, 3 Phase, 150A min (200A for Future Expansion)

© 2026 Miranda Water Technologies. All rights reserved.

Recommend power Factor	≥0.90
Estimated Overall Efficiency	90-95%
Control Voltage	24 VAC
Auxiliary Voltage	120 VAC, 1-Phase
Motor Starting Method	VFD on motors, pumps and blowers (estimated 3.5% additional electrical draw)
Largest Motor	UF Backwash Pump – 10 HP (7.5 kW)
Standby Generator Recommendation	60 kW (100 kW for Future Expansion & HVAC Inclusion)
Main Disconnect Rating	150 A min, 200 A preferred.

Please note: The plant specific process equipment for the facility Wastewater Treatment Plant. Equipment descriptions, specifications, and operating information are based on the installed equipment, manufacturer data sheets, and approved project design documents.

© 2026 Miranda Water Technologies. All rights reserved.

4. Equipment List and Tagging

The equipment list below provides the general process equipment for the MIRACELL® Wastewater Treatment Plant. Equipment descriptions, specifications, and operating information are based on standard equipment configurations.

Tag	Equipment	Quantity	Primary Function	Key Data / Reference
MRC-101 /MRC-102	MIRACELL® RBC modules	2 installed	Secondary biological treatment	Fixed-film biodisk system; MRC-103 / MRC-104 reserved for future expansion
CL-101	Lamella clarifier	1	Secondary clarification	Inclined plate settler downstream of RBC
SF-101	Automated sand filter	1	Tertiary filtration/polishing	Pressure sand filter with automated valves
UF-101	UF skid	1	Membrane filtration	2 × Akualys APM-80T modules; 160 m² total membrane area
UV-101 / UV-102	UV sterilizers	2	Final disinfection	Ecoline ECO 100, 10 m³/h each
P-101 / P-102	Wastewater feed pumps	2 duty/standby	Raw wastewater feed to EQ tank	Barnes ZSGV grinder pumps
P-103 / P-104	Sand filter and UF feed pumps	2 duty/standby	Feed to sand filter / UF train	Barnes NGV50*2 / NGVH50*2 curve basis
P-105 / P-106	UF backwash pumps	2 duty/standby	UF backwash / high-flow service	Barnes NGVHH100*2 dedicated pump curve basis; verify final tag mapping
P-107	Clarifier wash pump	1	Clarifier surface wash / sludge transfer support	Barnes SE5*4L sewage ejector
BL-101	UF aeration blower	1	UF membrane air scour/backwash air	Republic 4RC620 regenerative blower
PI-101 / PI-102 / PI-103	Pressure indicators	3	Local pressure indication	Aterma F400 glycerin-filled gauges
PS-101 / PS-102 / PS-103	Pressure switches	3	Pressure alarm/interlock control	Danfoss KP35 mechanical pressure switches
PT / PIT (if installed)	Pressure transmitter	As supplied	Analog pressure signal to PLC/monitoring	Danfoss MBS 1700 / MBS 1750, 4–20 mA
MX 101	Denitrification tank mixer	1	Agitation	Dynamix Model NMX1-49-1

© 2026 Miranda Water Technologies. All rights reserved.

LSL	Float Switch (Low Level)	7	Starting/stopping the pumps according to the water level.	Grundfos Float Switch MS1, 20 m cable
LSH	Float Switch (High Level)	7	Starting/stopping the pumps according to the water level.	Grundfos Float Switch MS1, 20 m cable
ORP-101	ORP Meter	1	Measuring & Monitoring Oxidation- reduction potential in the Denitrification Tank	Endress-Hauser or Hach GLI3/4 ORP Sensor
DOM-101	DO Meter	1	Measuring & Monitoring Dissolved Oxygen level in the Denitrification Tank	Endress-Hauser or YSI-Xylem YSI FDO 700 IQ
TMP-101	Temperature Meter	1	Measuring & Monitoring the temperature in the EQ Tank	Endress-Hauser or IFM TA3125
PHM-101	pH Meter	1	Measuring & Monitoring the pH in the EQ Tank	Endress-Hauser Liquiline CM14 with CPS11D
FI-101	Rotameter	1	Measuring the inlet flow of the MIRACELL® RBC system	LZS-50 1-10 m^3/h
AV-101 - 127	Electrical Actuated Valves	27	Automatic inlet/outlet control from relevant units.	Proval A100COM3005 (DN50) V209 (DN25)

Tag labels should be physically installed on or immediately adjacent to each component. Pump tags should also be shown in the electrical panel, operator log sheets, maintenance forms, and spare parts inventory. The operator should use tag numbers rather than generic descriptions when reporting alarms or requesting service.

© 2026 Miranda Water Technologies. All rights reserved.

5. Normal Operation of the System

Normal operation depends on stable flow, balanced biological loading, reliable pump cycling, proper solids removal, clean filtration media, controlled UF operating pressure, effective UF backwash, and reliable UV disinfection. The system should be operated in automatic mode unless maintenance or troubleshooting requires temporary manual operation by qualified personnel.

Under normal operation, the wastewater feed pumps transfer wastewater according to level control. The MIRACELL® disks rotate continuously at low speed, allowing biofilm to contact wastewater and air. Clarified flow moves to tertiary treatment. The sand filter operates in production until a timed or differential pressure backwash is required. The UF skid operates in filtration cycles followed by programmed backwash, air scour, forward flush, and chemical-enhanced cleaning cycles as configured. UV disinfection operates downstream of filtration when flow is present.

The operator should consider the pumps and blower as the primary mechanical components of the tertiary process. A problem with P-103 / P-104 affects feed to filtration. A problem with P-105 / P-106 affects UF cleaning and may rapidly reduce membrane performance. A problem with BL-101 affects membrane air scour and may increase fouling. A problem with P-101 / P-102 affects upstream feed and can create high-level or low-flow process instability.

5.1 MIRACELL® Motor with Gearbox

Brand	WATT Drive Gearbox with WEG Motor or substitute
Type	ASA 66C 3C 71-04E-TH-TF or substitute
Power	0,25 – 0,37 kWh
Revolution of Gear	Max 3.7 rpm

The drive motor and gearbox are designed for reliable, continuous operation with minimal routine maintenance. The gearbox is factory-filled with synthetic lubricant and the gearbox lubricant should be replaced every 10,000 operating hours or every two years, whichever occurs first.

Routine maintenance is primarily limited to inspection and lubrication of the drive shaft support bearings. Bearings shall be lubricated once per month using the recommended synthetic grease applied through the installed grease fittings.

Proper lubrication is indicated when a small amount of grease is visible at the bearing seals. Avoid over-lubrication, as excessive grease can increase bearing operating temperatures, create abnormal noise, and reduce bearing life.

© 2026 Miranda Water Technologies. All rights reserved.

During routine inspections, operators should verify the following:

- Inspect the motor, gearbox, bearings, and drive shaft for signs of wear, vibration, corrosion, or physical damage
- Check for abnormal gearbox oil leaks
- Listen for unusual noises from the motor, gearbox, or bearings during operation
- Confirm that all rotating components operate smoothly without excessive vibration
- Keep the motor cooling vents and fan housing clean and free of dust and debris to maintain adequate ventilation
- Protect electrical motors from excessive moisture, standing water, and heavy dust accumulation whenever possible

In cold weather, operators should be aware that gearbox lubricant viscosity increases as temperatures decrease, which may result in higher starting loads. Allow equipment to operate normally and monitor for any unusual noise or vibration during startup.

If abnormal noise, excessive vibration, overheating, or other signs of mechanical distress are observed, the equipment should be removed from service and inspected before being returned to operation.

Important: Do not remove motor guards, cooling fan covers, or protective safety devices while the equipment is operating. Always isolate electrical power and follow the facility Lockout/Tagout (LOTO) procedures before performing maintenance or servicing.

Observation	Normal Condition	Operator Concern
MIRACELL® disk rotation	Smooth, slow, continuous rotation	Noise, uneven rotation, shaft movement, stopped motor
Biofilm	Light to medium brown, attached, even	Black spots, excessive sloughing, pale biofilm, strong odour
Lamella clarifier	Clear overflow, sludge removed routinely	Floating solids, sludge blanket, plugged plates
Sand filter	Stable pressure and clear filtrate	Rising differential pressure, media carryover, incomplete backwash
UF skid	Stable TMP and clean backwash recovery	Rapid TMP increase, poor backwash, low flow, pressure alarms
BL-101 blower	Stable air delivery during UF air scour	High pressure, no air flow, abnormal noise, overheating
Pumps	Normal cycling, no vibration, expected pressure	Frequent trips, no flow, low pressure, air binding, clogged impeller

© 2026 Miranda Water Technologies. All rights reserved.

5.2 Process Performance Expectations

5.2.1 General

The MIRACELL® Rotating Biological Contactor (RBC) Wastewater Treatment System is a biological treatment process that continuously adapts to changing wastewater conditions. Unlike mechanical equipment, biological treatment performance cannot be evaluated solely by equipment operation. Operators should routinely assess both mechanical operation and biological process performance to ensure the treatment system continues to operate as designed.

The following sections describe the typical operating characteristics of a properly functioning MIRACELL® treatment system. Minor seasonal variations are considered normal and should not necessarily be interpreted as process problems.

5.2.2 MIRACELL® Biological Media

During normal operation, the biological media should rotate smoothly and continuously through the wastewater while supporting a healthy attached microbial biofilm.

Normal operating characteristics include:

- Uniform and continuous disc rotation
- Even biofilm distribution around the media
- Biofilm colour ranging from light brown to medium brown
- Thin to moderate biofilm thickness
- Periodic natural sloughing of excess biomass
- Minimal odour

Operators should investigate:

- White, grey, or black biofilm
- Excessively thick biological growth
- Large sections of bare media
- Uneven biological growth
- Excessive foaming
- Strong septic or sulphide odours
- Media that is not rotating normally

These conditions may indicate changes in loading, oxygen availability, wastewater characteristics, or equipment performance.

5.2.3 Biological Sloughing

© 2026 Miranda Water Technologies. All rights reserved.

As microorganisms reproduce, excess biomass naturally detaches from the rotating media and is transported to the downstream lamella clarifier.

This process, commonly referred to as biological sloughing, is a normal and essential part of the MIRACELL® treatment process.

Operators should expect:

- Periodic increases in suspended solids entering the clarifier
- Increased sludge production following periods of rapid biological growth
- Seasonal variations in sloughing frequency
- Temporary increases in clarifier solids loading

Excessive sloughing or complete loss of biofilm should be investigated, particularly following chemical upsets, prolonged power failures, or hydraulic shock loading.

5.2.4 Lamella Clarifier Performance

A properly operating lamella clarifier should consistently separate biological solids from the treated wastewater.

Normal operating conditions include:

- Clear overflow
- Stable sludge blanket
- Uniform sludge accumulation
- No excessive floating solids
- No short-circuiting of flow
- No excessive turbulence

Operators should investigate:

- Cloudy overflow
- Floating sludge
- Excessive sludge accumulation
- Rising sludge
- Solids carry-over
- Unusual odours

Poor clarifier performance often indicates an upstream process issue rather than a clarifier malfunction.

5.2.5 Sand Filter Performance (MIRACELL® Plus or Ultra Version)

The sand filtration system is designed to remove remaining suspended solids following clarification.

© 2026 Miranda Water Technologies. All rights reserved.

During normal operation:

- Effluent should remain visually clear
- Differential pressure should increase gradually between backwash cycles
- Backwash frequency should remain relatively consistent under stable operating conditions.

Operators should investigate:

- Rapid increases in differential pressure
- Frequent backwash cycles
- Reduced filtration flow
- Visible solids in filtered water
- Uneven filter operation

5.2.6 Ultrafiltration System Performance (MIRACELL® Ultra Version)

The ultrafiltration system provides final polishing prior to UV disinfection or water reuse.

Normal operation includes:

- Stable Transmembrane Pressure (TMP)
- Consistent permeate production
- Automatic backwash operation
- Stable cleaning intervals
- Clear permeate

Operators should investigate:

- Rapidly increasing TMP
- Frequent chemical cleaning
- Reduced permeate flow
- Membrane alarms
- High differential pressure

Increasing TMP is generally the first indication of membrane fouling

5.2.7 UV Disinfection Performance

The UV disinfection system provides final pathogen reduction prior to discharge or reuse.

Normal operation includes:

- Stable UV intensity
- Clean quartz sleeves

© 2026 Miranda Water Technologies. All rights reserved.

- No active alarms
- Continuous flow through the reactor
- Automatic lamp monitoring

Operators should investigate:

- Low UV intensity alarms
- Dirty quartz sleeves
- Lamp failures
- Reduced flow
- Excessive suspended solids entering the UV reactor

Poor UV performance is frequently associated with reduced upstream clarification or filtration performance rather than the UV equipment itself.

5.2.8 Sludge Production

Biological sludge production is a normal by-product of wastewater treatment.

Typical observations include:

- Gradual sludge accumulation
- Seasonal variations in sludge production
- Increased sludge production during warmer weather
- Increased sludge production following periods of increased loading

Operators should investigate:

- Very low sludge production
- Sudden increases in sludge volume
- Septic odours
- Poor sludge settling
- Floating sludge

Changes in sludge production often provide an early indication of changing biological conditions.

5.2.9 Typical Biological Observations

Observation	Typical Condition	Operator Action
Biofilm Colour	Light to medium brown	Continue normal operation

© 2026 Miranda Water Technologies. All rights reserved.

Biofilm Thickness	Thin to moderate, uniform	Continue monitoring
RBC Rotation	Smooth, continuous	Continue normal operation
Clarifier Overflow	Clear	Continue normal operation
Sludge Production	Gradual and consistent	Continue routine sludge removal
Sand Filter Pressure	Gradual increase between backwashes	Continue monitoring
UF Transmembrane Pressure	Stable	Continue routine operation
UV Intensity	Stable	Continue normal operation
Odour	Mild earthy wastewater odour	Continue normal operation

5.2.10 Chemical Usage Sample (Monthly Volume)

The following table provides the estimated monthly chemical consumption for a typical SmartCell™ MC100 Ultra wastewater treatment system configured with two Miracell® RBC modules, one Lamella Clarifier, and an average daily treatment flow of 60,000 L/day. Actual chemical consumption will vary depending on influent wastewater characteristics, treatment objectives, seasonal operating conditions, and process optimization.

The estimated alum consumption assumes a total phosphorus (TP) effluent objective of ≤1.0 mg/L, consistent with more stringent discharge requirements such as those commonly encountered in Ontario and other environmentally sensitive receiving waters. For jurisdictions where the permitted phosphorus limit is less stringent (typically 3–5 mg/L TP), chemical phosphorus removal using alum may not be required, or the required dosage may be significantly reduced depending on the influent phosphorus concentration and applicable regulatory requirements.

Chemical	Method of Release	Volume per Month
Sodium Hypochlorite (NaOCl)	Automatic via UF	87 kg/month (≈79 L/month, 12% solution)
Caustic Soda (Sodium Hydroxide, NaOH)	Automatic via UF	11 kg/month (≈8 L/month, 46% solution)
Hydrochloric Acid (HCl)	Automatic via UF	32 kg/month (≈28 L/month, 30% solution)
Alum (Aluminum Sulfate)	Automatic via Injection	54 kg/month (dry) or

© 2026 Miranda Water Technologies. All rights reserved.

		85 L/month (48% liquid)
Antiscalant (If utilized)	Manually Applied to Clarifier	0 — not required in the current design

5.2.11 Conditions Requiring Investigation

The following observations should prompt additional inspection:

- Persistent foaming
- Septic or sulphide odours
- Excessive sludge production
- Little or no sludge production
- Black or grey biofilm
- Large areas of bare media
- Poor clarifier performance
- Cloudy final effluent
- Increasing filter differential pressure
- Rapid increase in membrane TMP
- Repeated SmartCell™ alarms
- Declining ammonia removal
- Increasing Total Suspended Solids (TSS)
- Reduced UV intensity

Early investigation of abnormal operating conditions frequently prevents larger process upsets and minimizes downtime.

5.2.12 Performance Monitoring

Operators should evaluate treatment performance using both routine observations and laboratory data. Typical performance indicators include:

- Influent and effluent flow
- pH
- Biological Oxygen Demand (BOD_5)
- Chemical Oxygen Demand (COD), where monitored
- Total Suspended Solids (TSS)
- Ammonia (NH_3-N)
- Total Kjeldahl Nitrogen (TKN), where applicable
- Total Phosphorus (TP), where applicable
- Dissolved Oxygen (DO), where installed
- Oxidation Reduction Potential (ORP), where installed
- Turbidity

© 2026 Miranda Water Technologies. All rights reserved.

- UV intensity
- SmartCell™ operating trends and alarms

Routine review of these parameters, combined with visual inspection of the treatment process, provides operators with a comprehensive understanding of plant performance.

5.2.13 Operator Best Practices

Reliable wastewater treatment depends upon routine observation as much as laboratory analysis. Operators should become familiar with the normal appearance, sound, and operating characteristics of their treatment system. Small changes observed during daily inspections often provide the earliest indication of changing process conditions.

Maintaining detailed operating logs, reviewing SmartCell™ trend data, and performing regular laboratory sampling will enable operators to identify gradual changes in treatment performance and implement corrective actions before regulatory compliance is affected.

5.3 Process Optimization

5.3.1 General

The MIRACELL® Rotating Biological Contactor (RBC) Wastewater Treatment System has been designed to provide reliable wastewater treatment with minimal operator adjustment. Under normal operating conditions, the biological process naturally adapts to changes in wastewater flow and organic loading. Routine optimization should therefore focus on maintaining stable operating conditions rather than making frequent process adjustments.

The objective of process optimization is to maximize treatment performance, minimize operating costs, reduce maintenance requirements, and maintain regulatory compliance.

5.3.2 Process Stability

Biological treatment systems perform best under stable operating conditions.

Operators should strive to maintain:

- Consistent hydraulic loading
- Consistent organic loading
- Stable wastewater temperatures
- Continuous MIRACELL® rotation
- Routine sludge removal
- Proper operation of all downstream treatment equipment

© 2026 Miranda Water Technologies. All rights reserved.

Frequent or unnecessary changes to the treatment process should be avoided whenever possible.

5.3.3 Biological Process Optimization

The attached-growth biological process continuously adjusts to changing wastewater conditions.

To promote healthy biological activity:

- Maintain continuous operation of all MIRACELL® modules
- Avoid prolonged process shutdowns
- Prevent toxic chemicals from entering the wastewater collection system
- Avoid sudden increases in wastewater flow where practical
- Monitor ammonia and nutrient removal throughout seasonal transitions
- Allow sufficient time for the biological process to naturally adapt following significant loading changes

Unlike mechanical equipment, biological systems require time to respond. Process adjustments should therefore be evaluated over several days rather than hours.

5.3.4 Clarifier Optimization

Efficient solids separation is essential for maintaining high effluent quality.

Operators should:

- Monitor sludge blanket depth
- Remove accumulated sludge before excessive storage occurs
- Inspect effluent clarity during routine rounds
- Confirm sludge withdrawal equipment operates correctly
- Prevent excessive sludge accumulation within the clarifier

Poor clarification frequently originates from upstream biological conditions rather than mechanical problems within the clarifier itself.

5.3.5 Filtration Optimization

Where sand filtration or ultrafiltration is installed, filtration performance should remain consistent under stable loading conditions.

Operators should:

- Monitor differential pressure
- Review backwash frequency
- Verify automatic cleaning sequences

© 2026 Miranda Water Technologies. All rights reserved.

- Investigate rapid increases in pressure loss
- Avoid delaying scheduled maintenance

Increasing filter differential pressure generally indicates solids loading rather than equipment malfunction.

5.3.6 UV Disinfection Optimization

Reliable UV performance depends primarily upon the quality of the water entering the UV reactor.

Operators should:

- Maintain low suspended solids
- Keep quartz sleeves clean
- Monitor UV intensity
- Replace lamps in accordance with manufacturer recommendations
- Investigate low UV alarms promptly

Improving upstream clarification and filtration often restores UV performance without adjustment to the UV equipment itself.

5.3.7 Energy Optimization

The MIRACELL® treatment process has been designed to minimize electrical consumption through efficient equipment selection and automated process control.

Energy efficiency is optimized by:

- Maintaining VFD operation
- Avoiding unnecessary manual operation
- Keeping pumps and filters clean
- Maintaining bearings and rotating equipment
- Repairing leaking valves and piping
- Following preventive maintenance schedules

Operators should not disable automatic control sequences solely to reduce energy consumption, as treatment performance shall always remain the primary objective.

5.3.8 Seasonal Optimization

During seasonal transitions, operators should increase monitoring rather than making immediate process adjustments.

Areas requiring additional observation include:

© 2026 Miranda Water Technologies. All rights reserved.

- Ammonia removal
- Sludge production
- Clarifier performance
- Filter differential pressure
- Membrane Transmembrane Pressure (TMP)
- UV intensity

Most seasonal biological changes occur gradually and do not require corrective action.

5.3.9 Process Optimization Guide

Observation	Likely Cause	Recommended Action
Increased Ammonia	Reduced biological activity	Review temperature, loading and recent process changes
High TSS	Clarifier overload	Inspect clarifier and sludge removal
Frequent Filter Backwash	Increased solids loading	Review clarifier performance
High Membrane TMP	Membrane fouling	Perform recommended cleaning sequence
Low UV Intensity	Poor upstream treatment	Inspect filters and clean quartz sleeves
Excessive Sludge	Increased biological growth	Increase sludge removal frequency
Low Sludge Production	Reduced loading	Continue monitoring; no immediate action normally required
Increased Energy Consumption	Equipment inefficiency	Inspect motors, pumps and VFD operation

5.3.10 Best Practices

The highest treatment performance is achieved through consistent operation rather than continual adjustment.

Operators should:

- Observe the process daily
- Review SmartCell™ trends
- Perform routine laboratory testing

© 2026 Miranda Water Technologies. All rights reserved.

- Maintain detailed operating records
- Investigate abnormal conditions early
- Allow sufficient time for biological recovery following process changes

The MIRACELL® system has been designed to naturally adapt to changing wastewater conditions. Stable operation and routine preventive maintenance remain the most effective methods of optimizing treatment performance.

5.4 Extended Shutdown and Restart Procedure

5.4.1 General

Occasionally the wastewater treatment system may require temporary shutdown due to planned maintenance, equipment replacement, seasonal facility closure, extended power outages, or other operational requirements.

Whenever practical, extended shutdowns should be minimized to maintain biological activity and reduce recovery time following restart.

5.4.2 Planned Shutdown

Prior to a planned shutdown:

- Notify all affected personnel
- Complete all required Lock-Out/Tag-Out (LOTO) procedures
- Record operating conditions
- Complete any required laboratory sampling
- Remove accumulated sludge if appropriate
- Secure chemical systems
- Complete a visual inspection of the treatment process

Where shutdown duration is expected to exceed normal maintenance activities, consult supervisory personnel before proceeding.

5.4.3 Biological Considerations

The biological population continues to consume oxygen during shutdown.

The survival of the attached biofilm depends upon:

- Shutdown duration.

© 2026 Miranda Water Technologies. All rights reserved.

- Wastewater temperature.
- Organic loading.
- Whether the biological media remain moist.
- Whether the media remain partially exposed to air.

Extended periods without rotation may reduce biological activity, particularly for nitrifying bacteria.

Refer to **Section 2.13 – Emergency Power Failure and Process Recovery** for expected biological survival times.

5.4.4 Restart Inspection

Prior to restarting the treatment system, operators shall verify:

- All maintenance work has been completed
- Guards and safety covers have been reinstalled
- All tools have been removed
- Lock-Out/Tag-Out devices have been removed
- Process tanks are at appropriate operating levels
- Pumps rotate freely
- MIRACELL® shafts rotate freely
- Bearings have been inspected
- Gearboxes show no evidence of leakage
- Electrical panels are free of alarms
- Chemical systems are ready for operation

5.4.5 Restart Sequence

Following restoration of power:

1. Restore electrical power
2. Start the SmartCell™ control system
3. Verify communications and alarms
4. Select “Auto Start” and the following sequence will commence:
    a. Start MIRACELL® drive motors
    b. Start influent and process pumps
    c. Verify wastewater flow
    d. Start filtration systems
    e. Start UV disinfection
    f. Return automatic process control to normal operation
5. Observe equipment operation for a minimum of one complete operating cycle

5.4.6 Post-Restart Monitoring

© 2026 Miranda Water Technologies. All rights reserved.

Following restart, operators should monitor:

- Flow
- RBC rotation
- Pump operation
- Clarifier performance
- Sludge production
- Sand filter pressure
- Membrane Transmembrane Pressure (TMP)
- UV intensity
- Ammonia
- BOD_5
- TSS
- SmartCell™ alarms

Additional laboratory testing should be considered following shutdowns exceeding approximately 24 hours.

5.4.7 Biological Recovery

The biological process generally responds as follows:

Shutdown Duration	Expected Recovery
Less than 6 hours	Immediate return to normal operation
6–12 hours	Little or no measurable impact
12–24 hours	Minor reduction in biological activity
24–48 hours	Reduced nitrification; increased monitoring recommended
Greater than 48 hours	Biological recovery may require approximately 3–21 days depending upon temperature and biomass condition

Operators should avoid making unnecessary process adjustments during the recovery period. The attached-growth biological population will naturally re-establish equilibrium provided stable operating conditions are maintained.

5.4.8 Documentation

Following any extended shutdown, operators should document:

- Shutdown date and time

© 2026 Miranda Water Technologies. All rights reserved.

- Restart date and time
- Cause of shutdown
- Duration
- Equipment inspected
- Laboratory results
- Process observations
- Corrective actions performed
- Any recommendations for future operation

Maintaining accurate operating records assists in evaluating process performance and improving future maintenance planning.

© 2026 Miranda Water Technologies. All rights reserved.

6. Pump Systems – Overview

This section provides an overview of the typical pump systems used in a SmartCell™ wastewater treatment system designed for an initial treatment capacity of approximately 60 m³/day, with provisions for future expansion to approximately 200 m³/day. Each pump is engineered to perform a specific process function and has unique hydraulic characteristics, operating requirements, and maintenance procedures.

Pump selection, sizing, and duty are established as part of the project-specific Process Design Report (PDR) and detailed engineering package. Operators should ensure that each pump is operated and maintained in accordance with its intended service and should not interchange pumps between process duties unless approved by Miranda Water Technologies or the Engineer of Record.

The pump equipment identified within the SmartCell™ platform has been selected following an extensive technical evaluation conducted by Miranda Water Technologies. The selection process considered hydraulic performance, long-term reliability, energy efficiency, lifecycle cost, maintainability, supplier support, and suitability for continuous municipal wastewater treatment applications. Particular emphasis was placed on equipment that is readily available within Canada, carries the appropriate Canadian certifications (including CSA certification, where applicable), and is supported by established national distribution and service networks.

All process pumps are equipped with Variable Frequency Drives (VFDs) and are fully integrated into the SmartCell™ control platform. The use of VFDs allows the system to dynamically adjust pump speed to match real-time process demands, maintaining target flow rates, minimizing hydraulic surges, reducing energy consumption, improving process stability, and significantly reducing mechanical wear associated with fixed-speed motor operation. The SmartCell™ platform continuously optimizes pump performance using process feedback from flow meters, level transmitters, and other instrumentation, resulting in improved treatment efficiency, lower operating costs, and extended equipment life.

Recognizing that long-term operational reliability is as important as treatment performance, Miranda maintains a strategic inventory of critical pump assemblies, replacement components, and service parts to support rapid repairs and minimize plant downtime. This inventory strategy enables timely replacement of critical equipment and helps ensure the continued operation of SmartCell™ installations throughout Canada.

As with all SmartCell™ installations, the number, capacity, and configuration of pumps will vary depending on the treatment process, hydraulic loading, regulatory requirements, site conditions, and future expansion strategy. The pump information presented in this section is representative of a typical installation and should always be verified against the project-specific Process Design Report, equipment schedules, and engineering drawings prepared for each facility.

© 2026 Miranda Water Technologies. All rights reserved.

Tag	Service	Pump Model	Duty Point	Operating Speed	Remarks
P-101 / P-102	Wastewater feed to EQ tank	Barnes ZSGV grinder pump	9.1 m³/h at 4.99 m head	3450 rpm	Duty/standby raw wastewater grinder service
P-103 / P-104	Sand filter / UF feed	Barnes NGV50*2 / *NGVH50*2 grinder pump	12 m³/h at 3 bar	3450 rpm	Duty/standby feed service
P-105 / P-106	UF backwash	Barnes NGVHH100*2 grinder pump	29.1 m³/h at 3.06 bar	3450 rpm	Dedicated high-flow UF backwash curve basis; confirm final tag mapping
P-107	Clarifier wash/sludge transfer support	Barnes SE5*4L sewage ejector	30 US gpm / 6.8 m³/h at 16 ft / 4.9 m	1750 rpm	Clarifier surface wash and cleaning support

All pump operation should be evaluated against three conditions: hydraulic performance, electrical performance, and mechanical condition. A pump can appear to be running while still failing hydraulically if the impeller is clogged, the discharge valve is closed, the check valve is stuck, the suction is air bound, or the pump is operating far from its selected duty point.

For submersible pumps, the operator should confirm that the pump is submerged as intended, float or level controls are free to move, lifting chain or retrieval hardware is secure, power cables are protected, and the discharge connection is not leaking. Pump operation should be alternated between duty and standby pumps where the controls allow alternation. Standby pumps should not remain unused for long periods without test operation.

6.1 Pump Operating Notes Applicable to All Project Pumps

Before starting any pump after maintenance, the operator should confirm that the correct valves are open, the discharge path is available, the pump is properly seated or connected, the electrical supply is available, and the control mode is correct. A pump should not be repeatedly reset after an overload trip without identifying the cause of the trip.

- Confirm the pump tag before operating. Do not rely only on physical location
- Confirm upstream liquid level is adequate for the intended pump
- Confirm discharge valves and check valves are aligned for the intended operating mode
- Listen for abnormal grinding, rattling, cavitation-like noise, or vibration
- Confirm discharge pressure or flow response where instruments are available
- Record abnormal starts, overload trips, no-flow events, or repeated short cycling
- If the pump starts but no flow is observed, stop the pump and investigate valve position, air binding, blockage, check valve failure, and impeller condition

© 2026 Miranda Water Technologies. All rights reserved.

The pump curves provide the expected relationship between flow and head at the selected impeller diameter and speed. As system resistance increases, the pump operating point moves left on the curve, producing lower flow and higher head. As system resistance decreases, the pump operating point moves right on the curve. Operators do not normally calculate pump curves in the field, but they should understand that abnormal pressure readings can indicate plugged piping, closed valves, fouled filters, open bypasses, or mechanical wear.

6.2 P-101 / P-102 Wastewater Feed Pumps

P-101 and P-102 are the wastewater feed pumps. They are Barnes ZSGV grinder pumps selected for raw wastewater feed service. The duty/standby arrangement provides redundancy. These pumps transfer wastewater toward the equalization process and are expected to handle wastewater service conditions where solids reduction through grinding is required.

Parameter	Value
Manufacturer	Barnes (Crane Pumps & Systems)
Model / size	ZSGV
Type	Grinder pump – 3B
Quantity	2, duty/standby
Duty flow	9.1 m³/h
Duty head	4.99 m
Shutoff head	16.5 m
Shutoff differential pressure	162 kPa
Speed	3450 rpm operating / 3600 rpm synchronous
Impeller diameter	99 mm
Discharge	51 mm / DN40–DN50 reference
Fluid basis	Wastewater/water, SG = 1, density 999 kg/m³, viscosity 1.1 cP
Fluid temperature basis	15.6°C; pump limit 40°C in curve sheet; intermittent high-temperature rating noted in data sheet should be confirmed before operation

Operationally, P-101 / P-102 should start and stop in response to level control. If the upstream level rises and neither pump starts, investigate level control, control mode, overload state, power supply, and pump fault indication. If a pump runs but the downstream level does not increase or flow is not observed, check discharge valve position, plugged discharge, check valve status, grinder blockage, and air binding.

© 2026 Miranda Water Technologies. All rights reserved.

Because these pumps are selected as grinder pumps, the cutter/grinder condition is important. Ragging, wipes, stringy material, heavy grit, and foreign debris can reduce performance, increase motor load, and cause overload trips. Repeated overloads, reduced flow, unusual noise, or high current should be treated as possible grinder or impeller obstruction until proven otherwise.

Pump Data Sheet - Crane Barnes.60

Company:
Name:
Date: 03/05/2026

BARNES

Pump:

Size:	ZSGV	Dimensions:	
Type:	Grinder - 3B	Suction:	---
Synch Speed:	3600 rpm	Discharge:	51 mm
Dia:	99 mm		
Curve:	---		

Fluid:

Name:	Water		
SG:	1	Vapor Pressure:	1.77 kPa a
Density:	999 kg/m³	Atm Pressure:	101 kPa a
Viscosity:	1.1 cP		
Temperature:	15.6 °C	Margin Ratio:	1

Search Criteria:

Flow:	9 m³/hr	Near Miss:	---
Head:	4.877 m	Static Head:	0 m

Pump Limits:

Temperature:	40 °C	Sphere Size:	---
Wkg Pressure:	---		

Motor:

Motor is integral to the pump except in 4A, 4B, and 5B catalog sections.

Pump Selection Warnings:
None

--- Duty Point ---

Flow:	9.1 m³/hr
Head:	4.99 m
Eff:	---
Power:	--- kW
NPSHr:	---
Speed:	3450 rpm

--- Design Curve ---

Shutoff Head:	16.5 m
Shutoff dP:	162 kPa
Min Flow:	--- m³/hr

BEP: --- %
NOL Power:

--- Max Curve ---

Max Power:

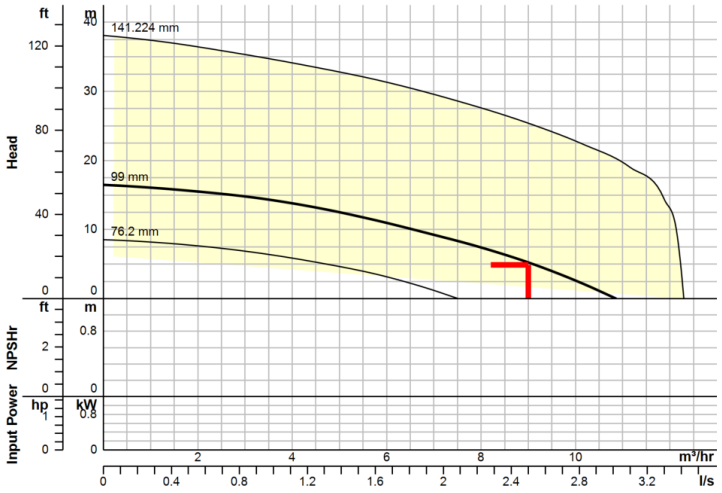

Temp. 160ï¿½F (71ï¿½C) Intermittent.

Performance Evaluation:

Flow	Speed	Head	Efficiency	Power	NPSHr
m³/hr	rpm	m	%	kW	m
10.8	3450	0.181	---	---	---
9	3450	5.21	---	---	---
7.2	3450	8.87	---	---	---
5.4	3450	11.9	---	---	---
3.6	3450	14.2	---	---	---

Selected from catalog: Barnes.60, Vers 4/23/20

Barnes ZSGV wastewater feed pump curve for P-101 / P-102.

© 2026 Miranda Water Technologies. All rights reserved.

6.3 P-101 / P-102 Troubleshooting and Maintenance

Symptom	Likely Causes	Operator Action
Pump does not start	No power, selector in OFF, overload tripped, level control not calling, faulty float/level device, cable damage	Verify control mode, level call, breaker, overload, and alarm status. Do not bypass controls except under authorized troubleshooting.
Pump starts then trips	Blocked grinder/impeller, excessive current, voltage issue, mechanical binding, wrong rotation if three-phase connections changed	Stop repeated resets. Isolate and inspect the pump. Check the current draw and compare the nameplate.
Pump runs but little or no flow	Closed discharge valve, blocked check valve, clogged discharge, air binding, damaged grinder/impeller	Confirm valve position and downstream path. Pull pump for inspection if blockage is suspected.
Frequent short cycling	Float/level setting too narrow, inflow surging, pump capacity too high for control band	Inspect level control setpoints and wet well volume. Confirm standby alternation settings.
Abnormal noise or vibration	Grinding assembly debris, bearing wear, impeller damage, loose mount, pump not seated	Stop pump if severe. Inspect mounting, guide rail/seating, impeller, grinder, and bearing condition.

Recommended routine maintenance for P-101/P-102 includes visual inspection of cable condition, lifting hardware, pump seating, control operation, and discharge performance. Pumps should be test-run in both duty and standby modes. Service intervals should be adjusted based on actual wastewater characteristics and frequency of ragging or debris accumulation.

6.4 P-103 / P-104 Sand Filter and Ultrafiltration Feed Pumps

P-103 and P-104 serve the sand filter and UF feed duty. These pumps are selected as Barnes NGV50*2 / NGVH50*2 grinder pumps based on the supplied pump curve. They provide pressurized feed flow to the tertiary filtration train. Stable operation of these pumps is important because downstream sand filters and UF performance depends on steady feed pressure and flow.

Parameter	Value
Manufacturer	Barnes (Crane Pumps & Systems)
Model / size	NGV50*2 / NGVH50*2
Type	Grinder pump - 3B

© 2026 Miranda Water Technologies. All rights reserved.

Quantity	2, duty/standby
Duty flow	12 m³/h
Duty head	3.00 bar
Shutoff head	3.34 bar
Shutoff differential pressure	334 kPa
Speed	3450 rpm operating / 3600 rpm synchronous
Impeller diameter	133.35 mm
Discharge	51 mm / DN40–DN50 reference
Pump limit temperature	40°C
Performance points	14.4 m³/h at 2.86 bar; 12 m³/h at 3.00 bar; 9.6 m³/h at 3.13 bar; 7.2 m³/h at 3.22 bar; 4.8 m³/h at 3.25 bar

The feed pump operating pressure should be interpreted together with the sand filter and UF valve position. High pressure with reduced flow may indicate sand filter fouling, closed or partially closed valves, blocked strainers, blocked piping, or UF inlet restriction. Low pressure with reduced flow may indicate a worn pump, open bypass, air ingress, incorrect valve alignment, or inadequate liquid level.

During automatic operation, P-103 / P-104 should not dead-head against closed valves. Verify that automated valves have moved to the correct position before pump start. If a pressure switch or transmitter is used for protection, confirm setpoints during commissioning and after any instrumentation replacement.

© 2026 Miranda Water Technologies. All rights reserved.

Pump Data Sheet - Crane Barnes.60

Company:
Name:
Date: 03/05/2026

Pump:

Size:	NGV50*2 / NGVH50*2	Dimensions:	
Type:	Grinder - 3B	Suction:	---
Synch Speed:	3600 rpm	Discharge:	51 mm
Dia:	133.35 mm		
Curve:	---		

Fluid:

Name:	Water		
SG:	1	Vapor Pressure:	1.77 kPa a
Density:	999 kg/m³	Atm Pressure:	101 kPa a
Viscosity:	1.1 cP		
Temperature:	15.6 °C	Margin Ratio:	1

Search Criteria:

Flow:	12 m³/hr	Near Miss:	5% of Head
Head:	3 bar	Static Head:	0 bar

Pump Limits:

Temperature:	40 °C	Sphere Size:	---
Wkg Pressure:	---		

Motor:

Motor is integral to the pump except in 4A, 4B, and 5B catalog sections.

Pump Selection Warnings:

--- Duty Point ---	
Flow:	12 m³/hr
Head:	3 bar
Eff:	---
Power:	--- kW
NPSHr:	---
Speed:	3450 rpm
--- Design Curve ---	
Shutoff Head:	3.34 bar
Shutoff dP:	334 kPa
Min Flow:	--- m³/hr
BEP: --- %	
NOL Power:	

--- Max Curve ---	
Max Power:	

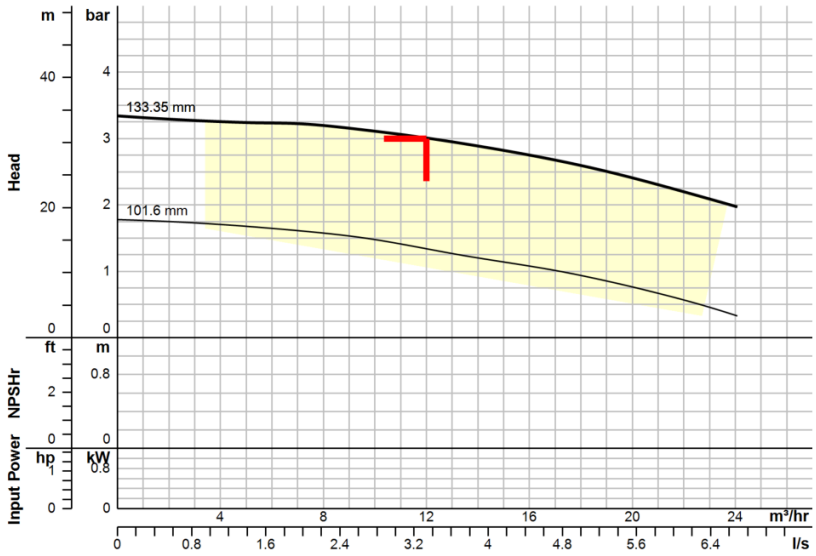

Performance Evaluation:

Flow	Speed	Head	Efficiency	Power	NPSHr
m³/hr	rpm	bar	%	kW	m
14.4	3450	2.86	---	---	---
12	3450	3	---	---	---
9.6	3450	3.13	---	---	---
7.2	3450	3.22	---	---	---
4.8	3450	3.25	---	---	---

Selected from catalog: Barnes.60, Vers 4/23/20

Barnes NGV50*2 / NGVH50*2 sand filter and UF feed pump curve for P-103 / P-104

© 2026 Miranda Water Technologies. All rights reserved.

6.5 P-103 / P-104 Operating and Troubleshooting Notes

Condition	Interpretation	Recommended Response
Pressure higher than normal and flow lower than normal	Restriction downstream of pump, fouled filter, valve not fully open, blocked strainer, or UF inlet restriction	Check valve status, sand filter differential pressure, strainer, UF inlet pressure, and bypass position.
Pressure lower than normal and flow lower than normal	Pump wear, air binding, low liquid level, suction restriction, open bypass, damaged impeller	Confirm tank level, pump submergence, valve position, and pump current. Inspect pump if condition persists.
Pump cycles frequently	Control level band or downstream demand issue	Review automatic controls and level sensor operation. Avoid repeated rapid starts.
Pump trips on overload	Blocked impeller/grinder, high head, voltage imbalance, motor fault	Do not repeatedly reset. Inspect mechanically and electrically.
Feed pump runs during wrong valve state	PLC sequencing or actuator feedback issue	Stop automatic sequence if necessary and verify valve positions against the operating mode table.

Feed pump maintenance should include verification that both duty and standby pumps can meet expected pressure, that check valves hold, that isolation valves operate fully, and that pump starts are not excessive. If a standby pump has not run recently, exercise it manually under controlled conditions.

6.6 P-105 / P-106 Ultrafiltration Backwash Pumps

P-105 and P-106 are treated in this manual as the UF backwash pumps based on the dedicated Ultrafiltration Backwash Pump curve supplied with this update. The curve identifies a Barnes NGVHH100*2 grinder pump selection with a high-flow duty point of approximately 29.1 m³/hr at 3.06 bar. This is materially different from the NGV50 feed pump selection, so the final tag-to-model mapping should be confirmed before issue for construction or final operator training.

Parameter	Value
Manufacturer	Barnes (Crane Pumps & Systems)
Model / size	NGVHH100*2
Type	Grinder pump - 3B
Proposed service	Ultrafiltration backwash pump

© 2026 Miranda Water Technologies. All rights reserved.

Duty flow	29.1 m³/h
Duty head	3.06 bar
Search flow	28.8 m³/h
Search head	3 bar
Shutoff head	4.5 bar
Shutoff differential pressure	450 kPa
Speed	3450 rpm operating / 3600 rpm synchronous
Impeller diameter	156 mm
Discharge	64 mm
Pump limit temperature	40°C
Performance points	28.8 m³/h at 3.09 bar; 23 m³/h at 3.64 bar; 17.3 m³/h at 3.99 bar; 11.5 m³/h at 4.29 bar

UF backwash is a cleaning and membrane recovery function. The backwash pump must deliver enough flow and pressure to reverse flow through the membranes and remove accumulated solids from membrane surfaces. If UF backwash flow is too low, transmembrane pressure will rise faster, filtration runtime will shorten, and chemical cleaning frequency may increase.

The backwash pump should operate only when the UF sequence calls for backwash, forward flush, or associated cleaning steps. It should not run continuously. Backwash pump operation must be coordinated with UF valves, air scour blower operation, filtrate/backwash tank level, and UF control logic.

© 2026 Miranda Water Technologies. All rights reserved.

Pump Data Sheet - Crane Barnes.60

Company:
Name:
Date: 03/05/2026

BARNES

Pump:

Size:	NGVHH100*2	Dimensions:	
Type:	Grinder - 3B	Suction:	---
Synch Speed:	3600 rpm	Discharge:	64 mm
Dia:	156 mm		
Curve:	---		

Fluid:

Name:	Water		
SG:	1	Vapor Pressure:	1.77 kPa a
Density:	999 kg/m³	Atm Pressure:	101 kPa a
Viscosity:	1.1 cP		
Temperature:	15.6 °C	Margin Ratio:	1

Search Criteria:

Flow:	28.8 m³/hr	Near Miss:	5% of Head
Head:	3 bar	Static Head:	0 bar

Pump Limits:

Temperature:	40 °C	Sphere Size:	---
Wkg Pressure:	---		

Motor:

Motor is integral to the pump except in 4A, 4B, and 5B catalog sections.

Pump Selection Warnings:
None

--- Duty Point ---	
Flow:	29.1 m³/hr
Head:	3.06 bar
Eff:	---
Power:	--- kW
NPSHr:	---
Speed:	3450 rpm
--- Design Curve ---	
Shutoff Head:	4.5 bar
Shutoff dP:	450 kPa
Min Flow:	--- m³/hr
BEP: --- %	
NOL Power:	

--- Max Curve ---	
Max Power:	

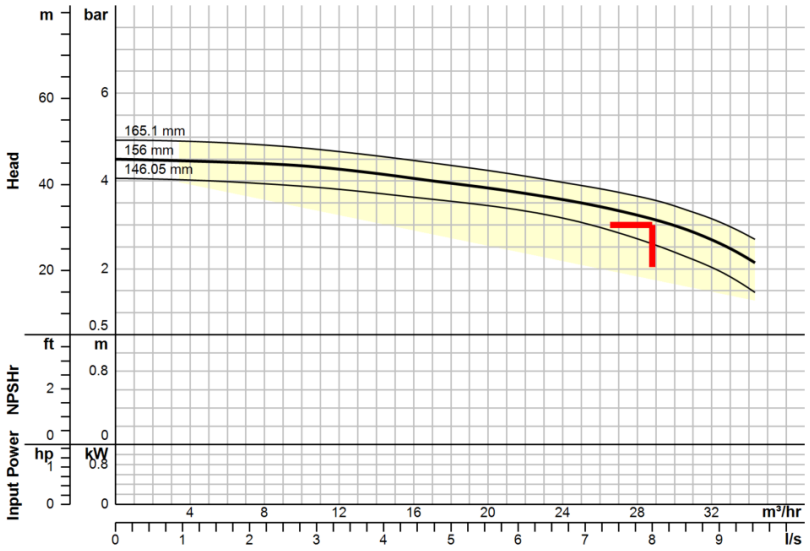

Performance Evaluation:

Flow	Speed	Head	Efficiency	Power	NPSHr
m³/hr	rpm	bar	%	kW	m
34.6	3450	---	---	---	---
28.8	3450	3.09	---	---	---
23	3450	3.64	---	---	---
17.3	3450	3.99	---	---	---
11.5	3450	4.29	---	---	---

Selected from catalog: Barnes.60, Vers 4/23/20

Barnes NGVHH100*2 ultrafiltration backwash pump curve for P-105 / P-106 basis.

© 2026 Miranda Water Technologies. All rights reserved.

6.7 P-105 / P-106 UF Backwash Troubleshooting

Symptom	Likely Causes	Operator Response
UF TMP rises rapidly after backwash	Insufficient backwash flow, backwash valve not open, blower not operating, membranes fouled, chemical cleaning overdue	Check backwash pump pressure/flow, valve states, BL-101 operation, UF sequence, and cleaning records.
Backwash pump runs but pressure is low	Low tank level, air entrainment, worn impeller, open drain/bypass, suction issue	Confirm backwash water source, valve alignment, and pump condition.
Backwash pump pressure is high	Closed valve, blocked UF line, blocked membrane train, pressure switch set too low, actuator failure	Stop if dead-heading is suspected. Verify valve sequence and line blockage.
Backwash cycle aborts	Pressure alarm, low level, electrical overload, PLC interlock, pressure switch fault	Read panel alarms, inspect instruments, and verify PS/PT status.
Excessive noise during backwash	Air entrainment, pump not fully submerged, mechanical wear, debris in impeller	Check source tank level and pump installation. Inspect pump if noise continues.

Backwash pump reliability is directly linked to UF membrane life. A weak backwash may not immediately stop production, but it will gradually increase fouling and can lead to avoidable chemical cleaning, reduced production, and premature membrane stress. Operators should treat abnormal backwash pressure or flow as a priority maintenance item.

6.8 P-107 Clarifier Wash Pump

P-107 is the clarifier wash pump. It is a Barnes SE5*4L sewage ejector selected for 30 US gpm at 16 ft head. The pump supports clarifier cleaning, surface washdown, and sludge transfer support functions associated with CL-101. It is not a process feed pump and should not be used as a substitute for the tertiary feed or UF backwash pumps.

Parameter	Value
Manufacturer	Barnes (Crane Pumps & Systems)
Model / size	SE5*4L
Type	Sewage ejector 2-3 inch - 1B
Quantity	1
Duty flow	30 US gpm / approximately 6.8 m³/h

© 2026 Miranda Water Technologies. All rights reserved.

Duty head	16 ft / approximately 4.9 m
Shutoff head	18.5 ft / 5.6 m
Shutoff dP	8.01 psi / 0.55 bar
Speed	1750 rpm operating / 1800 rpm synchronous
Impeller diameter	4.5 in / 114.3 mm
Discharge	2 in / DN50
Sphere size	1.5 in
Temperature limit	104°F / 40°C continuous
Performance points	36 gpm at 15.4 ft; 30 gpm at 16 ft; 24 gpm at 16.6 ft; 18 gpm at 17.1 ft; 12 gpm at 17.5 ft

The clarifier wash pump is intended to help remove floating solids, scum, accumulated biological material, and residual sludge from accessible clarifier areas. Operators should use it as part of routine clarifier housekeeping, not only after severe accumulation has occurred. Regular light cleaning is preferable to infrequent heavy cleaning.

© 2026 Miranda Water Technologies. All rights reserved.

Pump Data Sheet - Crane Barnes.60

Company:
Name:
Date: 03/05/2026

BARNES

Pump:

Size:	SE5*4L	Dimensions:	
Type:	Sewage Eject 2-3"-1B	Suction:	---
Synch Speed:	1800 rpm	Discharge:	2 in
Dia:	4.5 in		
Curve:	V104871		

Fluid:

Name:	Water		
SG:	1	Vapor Pressure:	0.256 psi a
Density:	62.4 lb/ft³	Atm Pressure:	14.7 psi a
Viscosity:	1.1 cP		
Temperature:	60 °F	Margin Ratio:	1

Search Criteria:

Flow:	30 US gpm	Near Miss:	---
Head:	16 ft	Static Head:	0 ft

Pump Limits:

Temperature:	104 °F	Sphere Size:	1.5 in
Wkg Pressure:	---		

Motor:

Motor is integral to the pump except in 4A, 4B, and 5B catalog sections.

Pump Selection Warnings:
None

--- Duty Point ---

Flow:	30 US gpm
Head:	16 ft
Eff:	---
Power:	--- hp
NPSHr:	---
Speed:	1750 rpm

--- Design Curve ---

Shutoff Head:	18.5 ft
Shutoff dP:	8.01 psi
Min Flow:	--- US gpm

BEP: --- %
NOL Power:

--- Max Curve ---

Max Power:

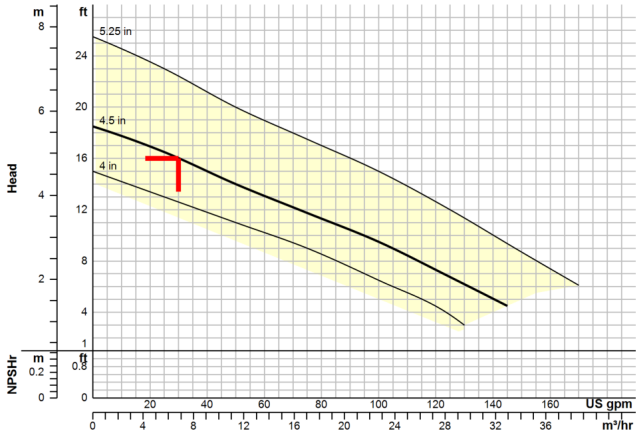

Temp. 104ï¿½F (40ï¿½C) Continous.

Performance Evaluation:

Flow	Speed	Head	Efficiency	Power	NPSHr
US gpm	rpm	ft	%	hp	ft
36	1750	15.4	---	---	---
30	1750	16	---	---	---
24	1750	16.6	---	---	---
18	1750	17.1	---	---	---
12	1750	17.5	---	---	---

Selected from catalog: Barnes.60, Vers 4/23/20

Barnes SE5*4L clarifier wash pump curve for P-107.

6.9 P-107 Clarifier Wash Pump Operating Notes

Before using P-107, confirm the wash water source, discharge path, valve positions, and safe access to the clarifier. Do not direct high-pressure flow in a way that damages lamella plates, dislodges structural parts, or forces solids into unintended process areas. Cleaning should move accumulated solids toward the intended sludge collection or drainage path.

© 2026 Miranda Water Technologies. All rights reserved.

Issue	Likely Cause	Corrective Action
Weak wash flow	Blocked nozzle/hose, low source level, pump wear, clogged impeller	Inspect hose/nozzle, verify tank level, clean pump/impeller.
Pump will not prime / no discharge	Submersible not properly submerged, air-locked discharge, closed valve	Confirm submergence and open discharge path.
Clarifier solids return after cleaning	Cleaning interval too long, sludge wasting insufficient, hydraulic disturbance	Increase inspection and sludge removal frequency.
Pump overheats or trips	Blocked impeller, excessive run time, poor cooling, voltage issue	Stop pump, inspect, and allow cooling. Do not operate dry.

Maintenance should include inspection of the pump, power cable, hose/nozzle assembly, strainers if installed, discharge fittings, and retrieval hardware. After cleaning, valves should be returned to their normal operating positions and the activity should be logged.

6.10 MX 101 Denitrification Tank Mixer

The mixer is configured for a blending application with mild mixing intensity, based on the assumed fluid viscosity and specific gravity. Since tank length is around 1.8 times the width, we recommend positioning the mixer in the center to have a greater area of influence in the tank and reduce dead spots on the corner. The 3 -blade Dynaflow impeller provides axial flow pumping. A VFD on the motor will allow for fine-tuning of the speed to achieve the desired outcome, depending on the quality of water introduced into the tank. The impeller hub is keyed to the shaft, and the blades are bolted to the tabs. Please ensure the tank is equipped with a top manway of at least 24 inches in diameter to allow for assembly of the hub and blades inside the tank.

Parameter	Value
Manufacturer	Dynamix
Model / size	NMX1-49-1
Shaft	Shaft 1.5" Dia x 89" Length (304SS)
Quantity	1
Bottom Impeller	50" Dynaflow 3-Blades with Keyed Hub (304SS)
Off Bottom	33”
Number of Blades	3

© 2026 Miranda Water Technologies. All rights reserved.

Mixing Class	Blending-Mild Mixing Intensity
Mixing Cycle	Continuous
Material	Wastewater
Baffles	No Baffles required
Mixer Performance	To re-suspend and maintain uniformity of Wastewater solution, this mixer will mix 44.5m3 per minute, turning your tank 1.0 times per minute.
Temperature	Ambient

© 2026 Miranda Water Technologies. All rights reserved.

7. BL-101 Republic 4RC620 UF System Blower

BL-101 is the Republic 4RC620 regenerative blower used specifically for the UF membrane aeration/air scour function during backwash or cleaning sequences. It is not a biological process aeration blower for the MIRACELL® RBC system. The RBC uses natural atmospheric oxygen transfer through disk rotation.

A regenerative blower produces air flow and pressure using a high-speed impeller directly connected to the motor shaft. Republic describes the 4RC620 as a low-maintenance, oil-free blower with die-cast aluminum construction. The bearings are located outside the compression chamber, improving operational reliability under differential pressure service. The blower can be mounted horizontally or vertically subject to manufacturer requirements and installation details.

Parameter	H57 Model - 60 Hz
Air flow	115 CFM / 195 m³/hr
Rated pressure	337 in H2O / 840 mbar
Rated vacuum	209 in H2O / 520 mbar
Motor power	8.8 HP / 6.6 kW
Sound level	72 dB
Weight	144 lb / 65 kg

The equipment data sheet identifies BL-101 as Republic 4RC620-H36 / H57. The final selected voltage, frequency, and motor rating must match the supplied blower nameplate and electrical drawings. Operators should record the actual nameplate data at commissioning.

© 2026 Miranda Water Technologies. All rights reserved.

REPUBLIC MANUFACTURING

4RC620

REGENERATIVE BLOWERS

Republic offers a complete line of regenerative blowers for high vacuum or compressed air applications in both horizontal and vertical mounted positions. TEFC motors are rated for 50/60 Hz operation and are IE3, cUL, UL, and CE certified. The impeller is directly connected to the motor shaft, providing powerful air force without undue friction. The bearings are outside the compression chamber, ensuring maximum operational reliability under high differential pressure. Constructed in robust die-cast aluminum, this low-maintenance, oil-free design provides continuous, dependable service to our customers.

IE3
CC339B
CE
c UL us
E493872



PERFORMANCE

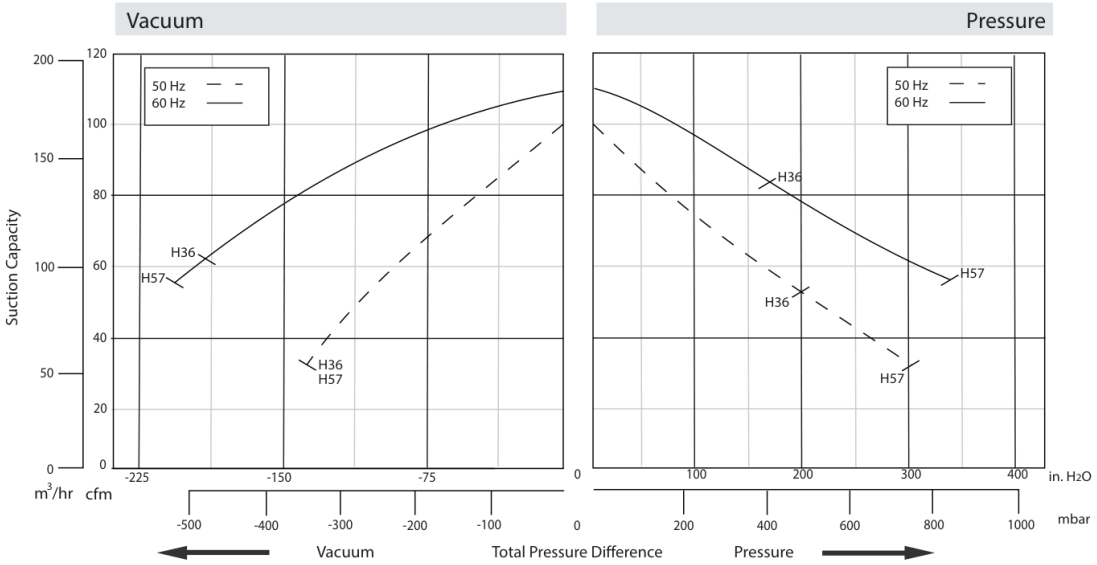

Model	Phase	Frequency (Hz)	Air flow (CFM/m³/hr)	Rated Vacuum (in. H_2O/mbar)	Rated Pressure (in. H_2O/mbar)	Motor (HP/kW)	Voltage (V)	Current (A)	Sound Level (dB)	Weight (lb/kg)
4RC620-H36	3	50	97/165	185/460	201/500	4.4/3.3	190 YY/380 Y	15.0 YY/7.5 Y	71	106/48
		60	115/195	193/480	169/420	5.1/3.8	230 YY/460 Y	14.2 YY/8.2 Y		
4RC620-H57	3	50	97/165	185/460	297/740	7.6/5.7	190 △△/380 △	21.7 △△/12.5 △	72	144/65
		60	115/195	209/520	337/840	8.8/6.6	230 △△/460 △	20.8 △△/12.4 △		

The performance curves are based on air at a temperature of 59 °F and an atmospheric pressure of 29.91 inch Hg with a tolerance of +/-10%. The total pressure differences are valid for inlet and ambient temperatures up to 77 °F. Suction capacity relates to inlet conditions. Pressure capacity relates to atmospheric conditions. For other conditions please contact Republic. Three phase motor tolerances are +/-10% for fixed voltage motors and +/-5% for voltage range motors. Single phase machines are designed with a +/-5% tolerance. The frequency tolerance is +/-2% maximum.

©Republic Manufacturing

Republic 4RC620 performance data and pressure/vacuum curves.

© 2026 Miranda Water Technologies. All rights reserved.

7.1 BL-101 Operating and Maintenance Guidance

BL-101 should run only during UF sequences that require air scour or backwash aeration. When running, the blower should produce a steady air sound without grinding, scraping, excessive vibration, or overheating. Operators should verify that air is reaching the UF train and that blower pressure remains within the expected range.

- Confirm that inlet filtration or inlet protection is clean and unobstructed.
- Confirm that the discharge path is open before the blower starts. Regenerative blowers can overheat when dead-headed or operated against excessive restriction.
- Confirm that relief valve, check valve, silencer, or pressure kit components are installed and maintained as supplied.
- Monitor PI-103 or the applicable blower pressure indicator during operation.
- Respond promptly to high pressure switch tips because they may indicate blocked air lines, closed valves, fouled diffusers, or incorrect UF sequence valve position.
- Do not lubricate the compressor chamber. The blower is oil-free. Motor bearings and service intervals shall follow the manufacturer documentation and nameplate requirements.

Symptom	Likely Causes	Operator Action
No air during UF air scour	Blower not called by PLC, overload trip, power failure, failed motor, closed discharge valve	Check UF sequence, panel status, overload, and valve position.
High blower pressure	Blocked air line, fouled diffuser/header, closed valve, wet line restriction, pressure switch setpoint issue	Stop if required. Inspect air path and verify valve sequence.
Low blower pressure or low air flow	Inlet filter blocked, leak in air line, worn blower, wrong rotation, relief valve open	Inspect inlet, piping, relief valve, rotation, and air distribution.
Excessive heat	Operating outside curve, restricted air flow, high ambient temperature, blocked inlet, poor ventilation	Remove restriction, improve ventilation, and verify pressure.
Abnormal noise	Bearing wear, foreign object, impeller contact, loose mounting	Stop and inspect. Do not continue operation if mechanical contact is suspected.

© 2026 Miranda Water Technologies. All rights reserved.

APPROXIMATE DIMENSIONS

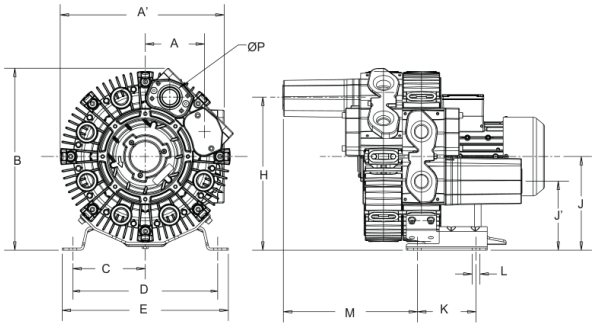

Model	Unit	A	A'	B	C	D	E	H	J	J'	K	L	M	ØP
4RC620	in	6.02	16.43	17.68	7.30	14.61	15.98	15.27	9.27	6.86	5.98	0.55	10.16	1.25
	mm	160	417	449	185	371	406	388	235	174	152	14	258	

Available Options

All Republic Regenerative Blowers are available in pre-assembled kits for either pressure or vacuum applications. These kits include an inlet filter, gauge and relief valve, and are factory tested prior to shipment. Optional items for these kits include check valve, and tube adaptor; washdown motors, explosion proof motors, or other specialty motors; noise enclosures; and control panels such as VFD's, PLC's, or starter panels.

VACUUM KIT

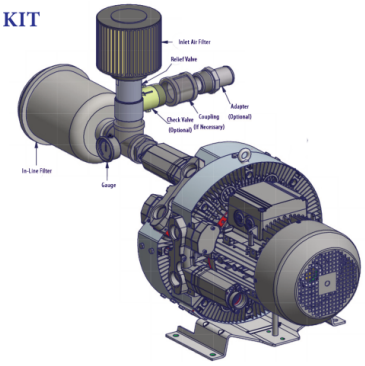

PRESSURE KIT

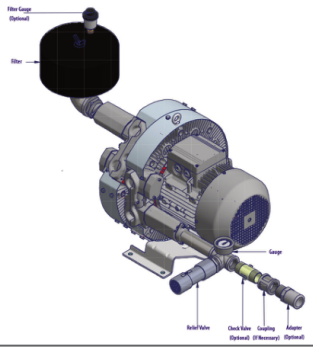

REPUBLIC MANUFACTURING

©Republic Manufacturing • Revised 20200811

5131 Cash Road, Dallas, TX 75247, USA
800.847.0380 • info@republic-mfg.com • republic-mfg.com

Republic 4RC620 approximate dimensions and pressure/vacuum kit reference.

© 2026 Miranda Water Technologies. All rights reserved.

© 2026 Miranda Water Technologies. All rights reserved.

8. Pressure Instrumentation

Pressure instruments are used to help operators understand hydraulic conditions, protect equipment, and confirm process sequence. This manual includes three pressure instrument types: local pressure indicators, mechanical pressure switches, and optional/if-supplied pressure transmitters. Local pressure indicators provide visual readings only. Pressure switches provide discrete ON/OFF alarm or interlock contacts. Pressure transmitters provide analog 4-20 mA signals to a PLC or monitoring system.

The equipment data sheets identify PI-101 / PI-102 / PI-103 as Aterma F400 glycerin-filled pressure gauges and PS-101 / PS-102 / PS-103 as Danfoss KP35 mechanical pressure switches. The uploaded Danfoss MBS 1700 / MBS 1750 document is included as a pressure transmitter reference where an analog pressure transmitter is installed or substituted.

Tag Type	Device	Signal	Typical Use
PI	Aterma F400 pressure gauge	Local visual indication only	Operator reads pressure locally at blower/process line
PS	Danfoss KP35 pressure switch	Discrete SPDT ON/OFF contact	High/low pressure alarm or equipment cut-out
PT / PIT	Danfoss MBS 1700 / 1750 pressure transmitter if installed	4–20 mA analog signal	PLC pressure monitoring, trending, alarms, and calculated differential pressure

8.1 Danfoss MBS 1700 / MBS 1750 Pressure Transmitter

The Danfoss MBS 1700 and MBS 1750 are compact general-purpose pressure transmitters designed for reliable pressure measurement in harsh industrial environments. The MBS 1750 version includes an integrated pulse snubber and is intended for applications with severe medium influences such as cavitation, liquid hammer, or pressure peaks. This can be relevant in pump discharge and fast valve operation areas where pressure surges may occur.

Parameter	MBS 1700 / MBS 1750 Data
Output signal	4–20 mA, two-wire, short-circuit protected
Supply voltage	9–32 VDC, polarity protected
Pressure ranges	Gauge ranges from 0–25 bar for MBS 1700; higher sealed gauge ranges available for MBS 1750

© 2026 Miranda Water Technologies. All rights reserved.

Wetted parts	AISI 316L stainless steel
Accuracy	Typical ±0.5% FS; maximum ±1.0% FS
Response time	MBS 1700: <4 ms for air/gases; MBS 1750: <35 ms
Temperature range	Media and ambient -40 to 85°C
Protection	IP65 with mating connector
Electrical connection	EN 175301-803-A plug, Pg 9
Wiring	Pin 1 = + supply; Pin 2 = - supply; Pin 3 = not used; earth connected to enclosure
Recommended torque	30–35 Nm, dependent on sealing material and installation conditions

If a transmitter is installed on a pump discharge or filter line, its reading should be compared to the local pressure gauge during commissioning. A significant difference may indicate calibration range mismatch, plugged impulse connection, wiring error, incorrect scaling in the PLC, or a failed device. Transmitter ranges should be selected so normal operation falls comfortably within the measurement span rather than at the extreme low or high end.

For liquid service with pressure peaks, the MBS 1750 pulse-snubber version is preferred where compatible with the medium. Danfoss notes that mounting the transmitter upright reduces the risk of nozzle clogging in liquids containing particles. Operators should avoid installing pressure transmitters in dead legs where solids can settle unless isolation and flushing are provided.

8.1 Pressure Instrument Troubleshooting

Symptom	Possible Cause	Corrective Action
Gauge reads zero when pump is running	Closed isolation valve, blocked gauge port, failed gauge, no pump flow	Open isolation, flush port if provided, and compare to adjacent instruments.
Gauge needle vibrates severely	Pulsation, pump cycling, air entrainment, no snubber	Inspect pump operation; add dampening/snubber if approved.
Pressure switch trips frequently	Setpoint too close to normal pressure, pressure spikes, restriction, failing switch	Verify actual pressure with gauge and adjust/replace only under authorized procedure.
PLC pressure value disagrees with gauge	Transmitter scaling error, wrong range, wiring issue, plugged port, calibration drift	Check 4–20 mA signal, PLC scaling, transmitter range, and impulse connection.
Transmitter output fixed near 4 mA or 20 mA	No pressure, overrange, failed transmitter, open loop, wiring fault	Check supply voltage, loop current, process pressure, and wiring.

© 2026 Miranda Water Technologies. All rights reserved.

Pressure instrumentation should be function-checked during commissioning, after replacement, and whenever process readings appear inconsistent with observed system operation. Any pressure switch used for equipment protection should be tested according to the commissioning checklist and documented in the maintenance log.

8.2 Instrument Verification and Calibration

8.2.1 General

The MIRACELL® Wastewater Treatment System utilizes the SmartCell™ Control System to continuously monitor, record, trend, and alarm critical operating parameters throughout the treatment process. Under normal operating conditions, SmartCell™ automatically verifies sensor inputs, records operating data, and notifies operators whenever process values exceed established operating limits.

Routine calibration of field instrumentation remains an important preventive maintenance activity to ensure continued measurement accuracy. Calibration intervals may vary depending upon the instrument manufacturer, operating environment, process conditions, and regulatory requirements.

Whenever possible, instrument calibration should be completed during scheduled maintenance activities to minimize disruption to plant operation.

8.2.2 SmartCell™ Instrument Monitoring

The SmartCell™ Control System continuously monitors process instrumentation and provides real-time operator information including:

- Equipment operating status
- Pump operation
- Motor current
- Process alarms
- Tank levels
- Flow monitoring (where installed)
- Pressure monitoring
- Differential pressure
- Transmembrane Pressure (TMP), where installed
- Chemical dosing status
- UV system status
- Filter operating status
- Communications status

© 2026 Miranda Water Technologies. All rights reserved.

Any abnormal readings, communication failures, or instrument faults are automatically logged and displayed through the Human Machine Interface (HMI), allowing operators to identify potential issues before process performance is affected.

8.2.3 Calibration Philosophy

Routine calibration should verify that field instruments continue to accurately represent actual process conditions.

Calibration is recommended:

- During scheduled preventive maintenance
- Following sensor replacement
- After process modifications.
- Following prolonged equipment shutdown
- Whenever SmartCell™ indicates abnormal or unstable instrument readings
- Whenever laboratory results do not reasonably correlate with instrument measurements

Where an instrument consistently produces stable readings and passes verification testing, adjustment may not be required.

8.2.4 Recommended Calibration Schedule

Instrument	SmartCell™ Monitoring	Recommended Verification	Typical Calibration
Level Sensors	Continuous	Quarterly	Annually or as required
Flow Meters (if installed)	Continuous	Quarterly	Annually
Pressure Transmitters	Continuous	Semi-Annually	Annually
Differential Pressure Sensors	Continuous	Semi-Annually	Annually
Ultrafiltration TMP Sensors	Continuous	Monthly Review	Annually or after replacement
pH Sensor	Continuous (if installed)	Monthly	Monthly or as required
ORP Sensor	Continuous (if installed)	Monthly	Monthly or as required
Dissolved Oxygen (DO) Sensor	Continuous (if installed)	Monthly	Monthly or as required
Temperature Sensors	Continuous	Semi-Annually	As required
UV Intensity Sensor	Continuous	Monthly	As required

© 2026 Miranda Water Technologies. All rights reserved.

Chemical Dosing Pumps	Continuous Operation Monitoring	Monthly Inspection	Verify dosing during maintenance
Motor Current Monitoring	Continuous	Automatic	No routine calibration normally required
VFD Operating Parameters	Continuous	Annual Review	As required

8.2.5 SmartCell™ Diagnostics

Unlike conventional control systems that rely primarily on periodic operator inspection, SmartCell™ continuously evaluates sensor status and equipment operation.

Typical automatic diagnostics include:

- Sensor communication failure
- Out-of-range values
- Signal loss
- Equipment operating status
- Pump runtime
- Motor overload
- Alarm acknowledgement history
- Historical trend analysis

Operators should investigate recurring alarms rather than repeatedly acknowledging or clearing them.

8.2.6 Laboratory Verification

Although SmartCell™ continuously monitors process conditions, routine laboratory testing remains an important component of process verification.

Where laboratory analyses are routinely performed, operators should compare laboratory results with instrument readings to confirm measurement accuracy.

Particular attention should be given to:

- pH
- Ammonia
- Turbidity
- Flow measurements
- Chemical dosing performance

Significant discrepancies between laboratory results and instrument readings should be investigated before process adjustments are made.

© 2026 Miranda Water Technologies. All rights reserved.

8.2.7 Calibration Records

All calibration and verification activities should be recorded as part of the facility maintenance program.

Calibration records should include:

- Instrument identification
- Date of verification or calibration
- Technician performing the work
- Calibration standard used
- As-found reading
- As-left reading
- Corrective action performed
- Instrument replacement, if applicable

Maintaining accurate calibration records assists with regulatory compliance, preventive maintenance planning, and long-term equipment reliability.

8.2.8 Operator Recommendations

The SmartCell™ Control System significantly reduces the routine workload associated with instrumentation by continuously monitoring equipment performance, recording historical operating data, and providing automatic alarms when process conditions deviate from established operating limits. Operators should utilize SmartCell™ trend data as the primary tool for evaluating process performance while performing routine verification of field instrumentation in accordance with the recommended maintenance schedule.

Routine observation of process trends often identifies developing issues before individual instrument values exceed alarm limits, allowing corrective action to be taken proactively rather than reactively.

© 2026 Miranda Water Technologies. All rights reserved.

9. Preventive Maintenance Program

9.1 General

Preventive maintenance should be performed at regular intervals and documented. The purpose is to prevent avoidable failures, protect treatment performance, and create a service history for warranty and troubleshooting. Intervals below are recommended starting points and should be adjusted based on site experience.

Frequency	Pump Tasks	Blower Tasks	Instrumentation Tasks
Weekly	Observe pump starts/stops, alarms, abnormal noise, tank levels, and flow indication	Observe BL-101 operation during UF sequence, pressure, and abnormal noise	Check visible pressure readings for abnormal values
Weekly	Exercise standby pumps, inspect cables and valves, and confirm no leaks	Inspect inlet filter/silencer and ventilation; confirm stable pressure	Compare gauge readings with expected operating mode
Monthly	Record pump current, check valve operation, inspect retrieval hardware, and clean accessible strainers	Inspect mounting bolts, air piping, relief/check valves, and pressure switch function	Inspect gauge condition and switch/transmitter wiring
Quarterly	Pull and inspect pumps if fouling history requires; verify alternation	Inspect blower inlet filter, vibration, and temperature trend	Function-test pressure switches and confirm PLC alarm response
Annually	Full pump inspection, seals/bearings per manufacturer, update spare parts	Blower service per Republic guidance; verify curve conditions and motor nameplate	Calibrate/replace instruments where required; verify transmitter scaling

Maintenance records should include the tag number, date, operating hours if available, observed condition, readings taken, parts replaced, corrective action, and technician name. A trend of increasing current, decreasing flow, higher pressure, or shorter UF cycle length is often more useful than a single reading.

9.2 Pump Maintenance Details

© 2026 Miranda Water Technologies. All rights reserved.

- Inspect pump lifting chains, guide rails, discharge elbows, and seating surfaces
- Inspect electrical cable jackets for abrasion, swelling, cracking, or strain at the entry point
- Check for evidence of seal leakage if the pump design provides seal leakage indication
- Clean grinder/impeller area when ragging or debris is suspected
- Confirm check valves close and do not allow backflow after pump stop
- Confirm isolation valves fully open and close
- Record current draw under normal operating conditions and compare to nameplate and historical readings
- Verify duty/standby alternation. A standby pump that never operates may fail when needed

Submersible pumps should not be operated dry except for very brief rotation checks when permitted by the manufacturer. Any dry test should be supervised and stopped immediately after direction verification. For the final installed pumps, always follow the Barnes O&M; manual and electrical nameplate data supplied with the actual equipment.

9.3 UF Blower Maintenance Details

- Keep inlet air filters clean and dry. A blocked inlet reduces flow and increases heat
- Verify that discharge piping is supported and does not load the blower casing
- Confirm that relief valves and check valves operate freely where installed
- Inspect for excessive vibration, loose mounting bolts, and abnormal noise
- Verify that the blower is not operating continuously outside the UF sequence
- Keep motor ventilation clear. Heat buildup shortens motor and bearing life
- Record operating pressure during air scour and compare against historical readings

Regenerative blowers are generally low maintenance, but they are sensitive to restriction and overheating. A blower that is repeatedly forced to operate against a blocked line or closed valve can fail prematurely. High pressure alarms should not be bypassed except under controlled testing by qualified personnel.

© 2026 Miranda Water Technologies. All rights reserved.

10. Operator Logs and Inspection Forms

The following log items should be incorporated into the plant inspection sheets. Logs are especially important during startup, after equipment replacement, and during the first months of operation when normal baseline readings are being established.

Log Item	Daily	Weekly	Monthly
P-101 / P-102 status and active-duty pump		X	
P-103 / P-104 feed pump status		X	
P-105 / P-106 UF backwash status		X	
P-107 clarifier wash use/runtime		X	
BL-101 air scour pressure during UF sequence		X	
PI readings at normal operating mode		X	
Pressure switch alarms or resets		X	
Pump current readings		X	
Standby pump test		X	
Valve alignment after maintenance		X	
Abnormal noise/vibration observations		X	
Parts replaced/service work			X

Operators should use consistent language in logs. For example, record "P-103 ran but PI-101 stayed at 0.2 bar" rather than "feed pump weak." Specific observations help technicians diagnose the actual failure mode.

© 2026 Miranda Water Technologies. All rights reserved.

11. Troubleshooting - Integrated Pump, Blower, and Pressure System

Troubleshooting should begin with the operating mode. A pump or blower that appears failed may simply be locked out by level, pressure, valve position, PLC sequence, or alarm condition. Confirm whether the equipment should be running before assuming mechanical failure.

Problem	Likely System Area	Most Useful First Checks
No flow to tertiary system	P-103/P-104 feed pumps, feed tank level, valve alignment	Check tank level, pump call, valve state, discharge pressure, and pump current.
Sand filter pressure rising	Sand filter fouling, feed pump pressure, valve restriction	Check filter differential pressure, backwash history, and valve position.
UF TMP rising rapidly	UF fouling, backwash pump, BL-101 blower, valve sequence	Check backwash flow/pressure, air scour, cleaning sequence, and feed turbidity.
High UF air pressure	BL-101 discharge restriction, closed valve, blocked air header	Check blower line valves, PI-103, PS-103, and air distribution.
Pump overload trip	Mechanical blockage, high head, voltage/current issue	Inspect pump, valves, impeller/grinder, and electrical readings.
Pressure reading unreliable	Gauge/transmitter port blocked, scaling error, failed instrument	Compare local gauge, transmitter signal, and process condition.

A recommended troubleshooting sequence is: 1) identify tag and operating mode, 2) check alarms, 3) check valve alignment, 4) check level condition, 5) check pressure/flow response, 6) check electrical status and current, 7) inspect mechanically only after isolating and making equipment safe according to site procedures.

11.1 Troubleshooting Tables by Equipment

Equipment	Fault	Probable Cause	Corrective Action
P-101 / P-102	Wet well/tank high level	Pump not starting, blocked grinder, discharge blockage, level device failure	Check control call, pump status, discharge path, and pull pump if blockage is suspected.

© 2026 Miranda Water Technologies. All rights reserved.

P-103 / P-104	Low feed pressure	Low source level, worn pump, open bypass, air entrainment	Check tank level, valves, pressure gauge, and pump current.
P-105 / P-106	Weak UF backwash	Wrong pump selected, valve sequence issue, low tank level, pump wear	Verify dedicated UF backwash pump model, backwash tank level, and valve state.
P-107	Poor clarifier cleaning	Blocked hose/nozzle, low pump flow, excessive solids accumulation	Clean hose/nozzle, increase cleaning frequency, and verify sludge wasting.
BL-101	No air scour	Blower not energized, overload, pressure switch trip, closed valve	Check PLC sequence, electrical status, pressure switch, and air line valves.
PS / PT	False alarm or incorrect reading	Blocked port, wrong setpoint, scaling issue, wiring fault	Verify with independent gauge and test signal.

© 2026 Miranda Water Technologies. All rights reserved.

12. Spare Parts and Critical Inventory

The spare parts inventory should include components recommended for the project-specific equipment installed at the facility. When procuring replacement parts, operators should verify the equipment manufacturer, model number, serial number, and nameplate information to ensure the correct parts are obtained.

Item	Recommended Spare	Criticality	Notes
P-101 / P-102	One complete Barnes ZSGV pump or critical wet-end kit	Medium	Required for raw wastewater feed redundancy.
P-103 / P-104	One complete Barnes NGV50/NGVH50 pump or critical wet-end kit	Medium	Feed to the tertiary system.
P-105 / P-106	One complete Barnes NGVHH100 pump or critical wet-end kit	Medium	UF backwash reliability is critical to membrane performance. Verify model before ordering.
P-107	One SE5*4L pump or impeller/seal kit	Medium	Clarifier cleaning support.
BL-101	Inlet filter, relief valve/check valve kit, motor starter parts, bearings per manufacturer	High	UF air scour reliability.
Pressure gauges	One spare matching range and connection	Low	Local indication.
Pressure switches	One spare Danfoss KP35 or approved equivalent	High	Alarm/interlock function.
Pressure transmitter	One spare MBS 1700/1750 matching range if installed	Medium/High	Analog monitoring where supplied.
Electrical	Fuses, overload relay, contactor, selector switch, indicator lamps	High	Match panel drawings and ratings.

All spare parts should be labelled with the tag number they serve. Pumps with similar appearance but different curves should be stored separately and clearly identified. Installing the wrong pump model can cause low flow, high pressure, inability to backwash, or motor overload.

© 2026 Miranda Water Technologies. All rights reserved.

13. Commissioning and Baseline Verification - Pumps, Blower, and Pressure Devices

Commissioning is the point at which the operator establishes the baseline readings that will be used for future troubleshooting. A pump or blower may be technically running, but without baseline pressure, current, flow, level, and sequence information, it is difficult to determine later whether performance has degraded. The commissioning records should therefore be treated as operational reference documents, not only construction closeout paperwork.

Each pump should be tested in manual and automatic mode where the control system permits. The test should verify correct pump tag, correct direction of rotation where applicable, correct valve alignment, expected pressure response, stable current draw, absence of abnormal noise, and proper stop/start response from level or sequence control. Duty/standby pumps should both be tested against the same hydraulic path where practical so that their performance can be compared.

Test Item	P-101/102	P-103/104	P-105/106	P-107	BL-101
Confirm nameplate matches manual	Yes	Yes	Yes	Yes	Yes
Confirm electrical rotation/operation	Yes	Yes	Yes	Yes	Yes
Record current draw	Yes	Yes	Yes	Yes	Yes
Record discharge pressure	If available	Yes	Yes	If available	Yes
Verify automatic call/start	Level control	Sequence/level	UF sequence	Manual/local	UF sequence
Verify standby operation	Yes	Yes	Yes	N/A	N/A
Confirm no abnormal noise/vibration	Yes	Yes	Yes	Yes	Yes
Confirm valve sequence prevents dead-head	Yes	Yes	Yes	Yes	Yes

If any pump is unable to operate near its expected duty condition during commissioning, the issue should be corrected before the plant is turned over. Possible causes include incorrect pump model, incorrect impeller trim, blocked or misaligned piping, incorrect valve position, electrical phase issue, or a system head condition that differs from the assumptions used during pump selection.

© 2026 Miranda Water Technologies. All rights reserved.

13.1 Baseline Readings Form

The table below should be completed during commissioning and repeated after major maintenance. These values establish the site-specific normal operating reference. Operators should keep the completed form with the O&M; manual and update it whenever equipment is replaced.

Tag	Mode Tested	Flow / Level Condition	Pressure Reading	Current Reading	Amperage	Pass / Fail	Comments
P-101							
P-102							
P-103							
P-104							
P-105							
P-106							
P-107							
BL-101							
PI-101							
PI-102							
PI-103							
PS-101							
PS-102							
PS-103							

A blank value is not acceptable for a commissioning record unless the item does not exist or is not applicable. If a value cannot be measured, the reason should be recorded. For example, if flow indication is not installed for a pump, record the observed hydraulic response such as level drawdown time, discharge pressure, or downstream tank filling response.

© 2026 Miranda Water Technologies. All rights reserved.

14. Pump Operating Philosophy by Process Area

The pumps do not operate as isolated pieces of equipment. Each pump affects a specific part of the treatment train. Understanding the process consequence of each pump failure helps operators prioritize response. A failed clarifier wash pump may reduce housekeeping efficiency, while a failed UF backwash pump can quickly affect membrane performance and tertiary treatment reliability.

Pump	Process Area	If Pump Fails	Immediate Priority
P-101 / P-102	Raw wastewater feed / upstream transfer	Wastewater feed interruption, upstream high level, reduced plant loading	High – Restore at least one pump or manage upstream storage.
P-103 / P-104	Sand filter / UF feed	Reduced or lost tertiary feed, UV may lose flow, UF production stops.	High – Restore duty or standby feed pump.
P-105 / P-106	UF backwash	UF membranes may foul rapidly, TMP increases, production cycles shorten.	Very High – Protect UF membranes and restore backwash capability immediately.
P-107	Clarifier wash / cleaning support	Clarifier housekeeping is reduced, sludge and scum may accumulate faster.	Medium – Schedule cleaning support or implement a temporary cleaning method.

Operators should avoid running downstream equipment when required upstream flow is not available. For example, a UF sequence should not continue indefinitely if feed pump performance is inadequate or backwash cannot be completed. Continuing to operate under abnormal flow/pressure conditions may cause additional faults and make troubleshooting more difficult.

14.1 Pump Protection and Alarm Philosophy

Pump protection is normally provided through a combination of electrical overloads, level permissives, control logic, valve position sequencing, and pressure indication or pressure switch feedback where installed. The exact control logic must be confirmed against the final MCC and PLC documentation. This manual describes the operational intent only.

- A pump should not start unless the required source level is adequate and the discharge path is available

© 2026 Miranda Water Technologies. All rights reserved.

- A pump should not continue to run if it is unable to generate the expected pressure or flow response
- A pump should stop or alarm if electrical overload, high pressure, low level, or sequence fault conditions occur. Duty/standby alternation should distribute runtime and confirm standby availability
- Pressure switches should be set far enough from normal operating fluctuation to avoid nuisance trips while still protecting equipment
- Any alarm that requires repeated manual reset should be investigated and corrected rather than treated as normal

Where pressure transmitters are used, alarm thresholds should be based on measured commissioning data plus reasonable operating margin. For example, a high-pressure alarm should account for normal pressure rise during filter loading but still activate before equipment is dead-headed or operating outside acceptable conditions. A low-pressure alarm should account for normal startup transients but still identify no-flow, open bypass, or pump failure conditions.

© 2026 Miranda Water Technologies. All rights reserved.

15. Detailed Pump Inspection Procedure

The following procedure provides a structured inspection approach for Barnes submersible pumps used on this project. It is not a substitute for the Barnes manufacturer O&M; manual, but it gives operators a practical sequence for routine inspection and first-line troubleshooting.

Step	Inspection Action	Reason
1	Identify pump by tag and service before beginning work.	Prevents servicing or operating the wrong pump.
2	Review recent alarms, current readings, runtime, and operator notes.	Provides context and prevents repeated troubleshooting.
3	Check source liquid level and discharge valve position.	Confirms the hydraulic path is available.
4	Observe start, run, and stop sequence from a safe position.	Identifies abnormal noise, vibration, short cycling, and delayed starts.
5	Record pressure and current during steady operation.	Allows comparison to baseline.
6	Inspect cable, lifting chain, guide rail, discharge connection, and visible piping.	Identifies physical damage or installation issues.
7	If performance is abnormal, isolate and remove the pump following site procedures.	Allows impeller/grinder/seal inspection.
8	Clean debris and inspect the grinder/impeller condition.	Restores performance and identifies wear.
9	Reinstall, test, and record final readings.	Confirms the corrective action worked.

A pump inspection should always finish with a functional test. If a pump is pulled, cleaned, and reinstalled but not tested, the operator does not know whether the original fault was corrected. The post-maintenance test should include at least one complete start-run-stop cycle and verification that the pump produces the expected hydraulic response.

15.1 Field Indicators of Pump Wear or Blockage

Pump problems often show up gradually before a complete failure occurs. Operators should be trained to recognize early indicators. Early correction typically reduces downtime and avoids unnecessary process upset.

© 2026 Miranda Water Technologies. All rights reserved.

Indicator	Possible Meaning	Recommended Follow-Up
Current increasing over time	Mechanical drag, blockage, bearing/seal issue, higher system head	Compare against the baseline and inspect the pump if the trend continues
Pressure lower than baseline	Worn impeller/grinder, low speed, open bypass, air entrainment	Check valves, level, and pump condition
Pressure higher than baseline	Downstream blockage, fouled filter, closed valve, check valve issue	Inspect downstream process and valve alignment
Runtime increasing for same level change	Reduced pump capacity or increased downstream resistance	Measure drawdown/fill time and inspect pump and piping
More frequent clogging	Influent debris issue, wipes/rags, inadequate screening, grinder wear	Review upstream screening and pump grinder condition
Standby pump performs differently than duty pump	Different wear condition, wrong impeller/model, electrical issue	Compare nameplates and readings; inspect weaker pumps

Where two pumps serve the same duty, comparing one pump to the other is one of the fastest diagnostic tools. If P-103 and P-104 operate under the same conditions but one produces significantly lower pressure or higher current, that pump should be inspected before the issue becomes a failure.

© 2026 Miranda Water Technologies. All rights reserved.

16. UF Backwash Reliability Notes

The UF backwash pumps and BL-101 blower should be viewed as a combined membrane protection system. The backwash pump provides reverse hydraulic cleaning, while the blower provides air scour to help dislodge solids from the membrane surfaces. Weak performance from either system may not cause immediate failure, but it can accelerate fouling and reduce UF production stability.

Operators should pay close attention to the trend in transmembrane pressure, backwash pressure, air scour pressure, filtrate quality, and cycle length. A single high TMP alarm may be caused by a temporary upset, but a trend of increasing TMP after each production cycle usually indicates that backwash is not fully recovering membrane permeability or that feed water quality has changed.

UF Cleaning Observation	Possible Cause	Operational Meaning
TMP recovers after backwash	Backwash system functioning reasonably	Continue monitoring trend
TMP only partially recovers	Backwash flow low, air scour weak, chemical clean needed	Investigate P-105/P-106 and BL-101
TMP does not recover	Severe fouling, valve sequence issue, membrane blockage	Stop and troubleshoot before extended operation
High air scour pressure	Blocked air header or closed valve	Inspect BL-101 discharge path.
Low air scour pressure	Air leak, relief valve open, blower underperforming	Inspect inlet/discharge, relief valve, and blower condition

For this reason, backwash pump and blower issues should be recorded in the UF log, not only in the mechanical maintenance log. The process consequence is membrane fouling, so process staff and maintenance staff both need visibility.

© 2026 Miranda Water Technologies. All rights reserved.

17. Pressure Reading Interpretation Guide

Pressure readings are most useful when interpreted together with operating mode. The same pressure value may be normal in one mode and abnormal in another. Operators should always record the mode when recording pressure: sand filter production, sand filter backwash, UF production, UF backwash, UF air scour, bypass, or standby.

Mode	Expected Pressure Behavior	Abnormal Indications
Sand filter production	Feed pressure stable; slow rise as media loads	Rapid pressure rise, low feed pressure, unstable gauge needle
Sand filter backwash	Backwash pressure rises during media expansion	No pressure, excessive pressure, valve sequence fault
UF production	UF inlet/feed pressure stable; TMP trend monitored	Increasing TMP, feed pressure low, pressure switch alarm
UF backwash	Backwash pump pressure sufficient for reverse flow	Low backwash pressure, high pressure trip, poor TMP recovery
UF air scour	BL-101 air pressure steady during blower operation	High pressure restriction or low pressure leak/no blower output
Standby	Most process pressures should return to static/low values	Pressure remains trapped where drain/relief expected

A pressure gauge or transmitter port can plug with solids or scale. If a reading does not make sense, compare it to another instrument, observe the process response, and inspect the connection. Do not adjust pressure switch setpoints simply because an alarm is inconvenient; first verify whether the pressure condition is real.

© 2026 Miranda Water Technologies. All rights reserved.

18. Pump and Blower Training Notes

Operators should receive training on the project-specific pumps, blower, and associated control systems installed at the facility. Training should include equipment identification, process function, control panel operation, automatic operating sequences, alarm response procedures, routine inspections, and basic mechanical maintenance. Operators should also become familiar with normal operating conditions and the indicators of abnormal equipment performance to support safe and reliable plant operation.

- Show the operator each pump tag in the field and on the P&ID diagram
- Explain the difference between feed pumps, backwash pumps, and wash/cleaning pumps
- Show the difference between P-103/P-104 feed pump curve and P-105/P-106 UF backwash curve
- Identify BL-101 as the UF blower only, not RBC aeration
- Show where PI, PS, and any PT/PIT devices are installed
- Demonstrate how to record baseline readings and compare future readings
- Review when to stop equipment and call qualified maintenance rather than repeatedly resetting alarms

The most important operator habit is to record facts rather than conclusions. Good record: "P-105 started during UF backwash, PI reading reached 1.2 bar instead of usual 3.0 bar, TMP did not recover." Poor record: "UF pump bad." Factual records reduce troubleshooting time and improve support from Miranda and equipment suppliers.

© 2026 Miranda Water Technologies. All rights reserved.

19. Extended Field Forms - Pump and Blower Rounds

The following field forms are intended to be printed or copied into the operator log book. They are included directly in the manual to encourage consistent records for the newly incorporated pump, blower, and pressure instrumentation systems.

Date	Time	Operator	Weather/Room Temp	General Note

19.1 Daily Pump Round Sheet

Complete this sheet during routine operator rounds. Any abnormal entry should be followed with a work order, service note, or troubleshooting entry.

Tag	Auto / Hand / Off	Running?	Pressure	Current	Noise / Vibration	Leaks / Damage	Action Required
P-101							
P-102							
P-103							
P-104							
P-105							
P-106							
P-107							

© 2026 Miranda Water Technologies. All rights reserved.

Round comments:

_____

Corrective action taken:

_____

Operator signature: _____

Supervisor review: _____

19.2 Weekly Duty / Standby Pump Exercise Sheet

Duty and standby pumps should both be exercised so that a hidden standby failure does not remain unnoticed. Record the response of each pump during a controlled test.

Pump Pair	Duty Pump Tested	Standby Pump Tested	Both Produced Similar Responses?	Difference Noted	Follow-Up Required
P-101 / P-102					
P-103 / P-104					
P-105 / P-106					

Test notes:

_____

If one pump produces lower pressure, higher current, abnormal noise, or slower level response than its paired pump, inspect that pump before returning it to standby reliance.

19.3 UF Backwash and Blower Performance Log

This log is used to track membrane cleaning performance. A trend of declining backwash recovery should be investigated before UF production becomes unstable.

Date	UF Mode	P-105 / P-106 Backwash Pressure	BL-101 Air Pressure	TMP Before BW	TMP After BW	Alarm?	Comments

© 2026 Miranda Water Technologies. All rights reserved.

Interpretation guidance: If TMP after backwash rises over several days, verify backwash pump flow/pressure, air scour pressure, valve sequence, feed water quality, and chemical cleaning history.

19.4 Pressure Instrument Calibration / Function Check Log

Use this sheet for local pressure gauges, pressure switches, and any pressure transmitters installed in the system. Function checks should be performed by qualified personnel using appropriate test equipment and site procedures.

Tag	Device Type	Range / Setpoint	As Found	As Left	Action Taken	Technician	Date
PI-101	Gauge						
PI-102	Gauge						
PI-103	Gauge						
PS-101	Pressure Switch						
PS-102	Pressure Switch						
PS-103	Pressure Switch						
PT/PIT	Transmitter if installed						

For 4-20 mA transmitters, record PLC scaling and measured loop current at known pressure points. Verify that the displayed pressure matches the transmitter range and engineering units.

© 2026 Miranda Water Technologies. All rights reserved.

20. Ultrafiltration System

20.1.General Specifications

Since the plant is pre-installed, assembly on site is very easy.

Various parts of the equipment are assembled on a compact skid, thus it may be assembled in a narrow area.

The operation is completely automatic and depending on the water requirement of the storing tank, it operates in an electrically automatic way. Besides, the plant is equipped with a system automatically adjusting the dosage of the plant acid, caustic and chlorine products.

The location status of every part of the equipment is designed to be reached easily during control and periodic services.

Besides, the plant is equipped with an electric control panel main board. This is where the inlet feed and automatic functions are realized.

The flow diagram in Fig. 3-1 shows a basic flow diagram of a typical ultrafiltration system. The system consists of a feed pump, strainer, a rack equipped with UF modules, filtrate/backwash tank and a backwash tank. Equipment to be used depends on the system design. Depending on the feed, water quality in-line coagulation system and a dosing system for chemical backwashes can be added.

The chemical backwash system can comprise dosing systems for disinfection (NaOCl), caustic (NaOH) and acid (HCl, H_2SO_4) cleans, again depending on feed water characteristics.

See E.1 UF Process Design Summary

The raw water is introduced into the UF modules by means of a pump. Before it enters the modules, it passes a strainer which filters coarse particles to protect the membranes. An inline coagulation device can be installed to improve filtration performance and backwash efficiency with certain water types.

The raw water passes through the ultrafiltration membrane and is delivered to the filtrate/backwash tank. Periodically, the membranes should be backwashed to remove the debris accumulated on the membrane surface. The water used for the backwash should be taken from the filtrate/backwash tank. Chemical dosing into the backwash water can be performed to enhance the backwash efficiency.

20.2 Operating Conditions

Modules of UF system have to be operated in compliance with the following operating conditions:

- Pre-filtration should be done until for particles bigger than 300 micrometer, if there is a risk that the influent water contains particles which could cause damage to the membranes. The selection of the used cut-off depends on the application.

© 2026 Miranda Water Technologies. All rights reserved.

- Contact of the membrane with abrasive materials (e.g. metal or plastic dwarf, sand, etc.) must be prevented.
- The quality of influent water must be monitored after the addition of chemicals and pre-filtration (For the purpose of comparative analyses with reference to the quality of influent water).
- Allowable operating temperature
    - 0 °C to maximum 40 °C
    - Temperature change: maximum 1°C/minute
- Allowable pH range of influent water
    - Operation 3 – 10
    - Cleaning 1 – 13
- Precipitation (e.g. Fe, Mn, $CaCO_3$) in the membrane due to process conditions must be prevented.
- All types of water and air hammer (of pneumatic and/or hydraulic origin) must be prevented.
- Chemicals for cleaning/disinfection
    - NaOCl (as active chlorine) max. 200 mg/l (ppm) or 200,000 ppm hours total
    - $H_2 O_2$ max. 500 mg/l
    - NaOH max. pH 13
    - HCl, H_2SO_4, citric acid min. pH 1

Caution! Please review the appropriate SDS's for storing and handling of the chemicals being used. Please consult Miranda before using any other chemicals other than those above and obtain written approval from Miranda for their use and the corresponding concentrations to be applied.

- Allowable trans membrane pressure (TMP)
    - Filtration: max. 3.0 bar
    - Backwash: 3.0 bar

The operation of membranes at any combination of maximum limits of temperature, pH, chemical concentration and/or pressure, during production or cleaning, will influence the lifetime of the membranes. The allowable trans membrane pressures do not result from limitations in the stability of the membrane, but from the good operating practices for UF membranes. A compaction of fouling layers on the membrane surface should be avoided, enabling a stable long-term operation. The burst pressure of the Multibore membrane is above 10 bar.

- Substances that may cause damage to the membrane

Do not subject the membranes to increased concentrations of oil, grease/fat or other elements (of organic or inorganic origin), that can cause chemical or physical destruction of the integrity of the module. Prevent any and all contact of the module/membrane with polar, organic solvents, chlorinated solvents or concentrated acids/bases.

Modules in the system that have been destroyed irreparably as a result of these substances are not covered by the Miranda guarantee.

- System Design Miranda UF-modules

Each module must be operated with the same operating conditions.

© 2026 Miranda Water Technologies. All rights reserved.

- Adding Coagulants In Front Of the Ultrafiltration

Depending on the dissolved organic carbon (DOC) type and the concentration in the feed water, it might be necessary to add coagulants [$FeCl_3$, $Al_2(SO_4)_3$, polyaluminium chloride] to the feed system. With coagulants, the membrane performance can be improved or stabilized. Furthermore, the amount of the DOC and phosphate in the filtrate can be reduced.

Depending on the temperature of the feed water, the system should be designed in such a way that the contact time required by the coagulants permits the coagulation process to be completed prior to membrane filtration. Under no circumstances should the coagulation process take place within the membrane or on the filtrate side.

Caution! Note that the use of flocculation aids (e.g. polyelectrolyte) or flocculants with organic components/functional groups may result in irreversible membrane fouling.

Please consult Miranda before using any other coagulants/chemicals and obtain written approval for their use.

- Regular Tightness Tests

Regular general maintenance conducted on the UF plant should include checking all the demountable connections within the UF system (flanges, valves, etc.) and on the UF modules (couplings, Victaulic joints) and repairing the corresponding seals in the event of any leakage.

Fluid leakage, especially where corrosive mediums are involved, may cause corrosion to appear on the components.

In the event of fluid escaping due to a leak, the affected area should be properly sealed, rinsed down with salt-free or low-salt water and rubbed dry.

20.3 Operating and Start-Up Guidelines

Before operation, ensure that:

- The scope of supply is complete and the UF modules have been installed correctly.
- During construction/erection of the ultrafiltration system dead spots must be eliminated. This is important especially for the filtrate part of the entire system.
- The entire system and pipes is cleaned before the UF System is connected and installed so that no impurities, abrasive materials and oily materials from the system can be washed into the UF System.
- The connection pipes to all UF system subunits are separately fixed and supported without putting on an additional mechanical load or stress to the UF system parts (complete tension free installation).

© 2026 Miranda Water Technologies. All rights reserved.

- The de-aeration valves are functional and no trapped air can emerge in the manifolds.
- The automatic program sequence (PLC control) runs error-free and that erroneous switching and/or water or air hammer [of pneumatic and/or hydraulic origin] is avoided.

20.4 Documentation of Operating Conditions

The documentation is mandatory for granting warranties. The documentation of the operating conditions and the respective operating times of the several operating modes have to be fulfilled from the first use of the modules. Any warranty claim must be accompanied by a complete set of documentation to be provided to Miranda.

The following operating conditions of the membrane plant have to be recorded (and documented) for purposes of control, optimization or approval of important process parameters (including retrospectively).

- pH-value and temperature directly in front of the Ultrafiltration (UF).
- Concentration*, contact time* and kind* of coagulant (type*, manufacturer*) prior to the UF feed; (if the use of coagulants is foreseen).
- Turbidity prior to the UF.
- Flow rate per rack / per train during filtration.
- Trans-membrane pressure (TMP) and absolute pressure (feed/filtrate) per rack / per train during filtration.
- Flow rate per rack / per train during backwash.
- Trans-membrane pressure (TMP) and absolute pressure (feed/filtrate) per rack / per train during backwash.
- pH-value and temperature of backwash water directly prior to the UF (if acid and/or caustic are used for backwash).
- Use of chemicals
    - Cleaning chemicals (type*, concentration*, manufacturer*, contact time, pH value)
    - Backwash chemicals (type*, concentration*, manufacturer*, contact time, pH value)
- In case of any module defects, the position of the defective module within the rack (train, rack/unit, side, position), with a statement of the module serial number*, has to be provided.
- As verification of the maximum permissible operating pressure (according to the data sheet), analogue pressure gauges with drag indicator (gauges provided with documentation) shall be installed in each unit/rack (feed and filtrate side).

The recording of the data listed above shall be proven through a complete data collection (operating protocol). The recording shall be conducted at least every 3 seconds (during the filtration cycles at least every 3 minutes), so that all effects of changing pump and/or valve positions (changing step sequences) are registered. For the relevant documentation and optimization of the membrane plant, the data collection has to be conducted in the shortest possible intervals.

© 2026 Miranda Water Technologies. All rights reserved.

20.5 Membrane Downtime Conditions

After use, the membranes must be stored wet at all times. To avoid microbiological growth during shutdown or storage of decommissioned modules, wet membranes must be treated with a compatible biocide/disinfection solution. Please follow the corresponding recommendations for different downtime conditions/periods:

- **Downtime up to 24 hours**

In general, simply stop the system following a backwash at a minimum flux-rate of 230 lt/m^2.h for at least 60 seconds. No other action is necessary.

- **Downtime > 24 hours**

Perform a daily filtration sequence at a minimum flux-rate of at least 50 lt/m^2.h for at least 10 minutes. Perform a daily backwash sequence at a flux-rate of 230 lt/m^2.h with a NaOCl solution (2 mg/l as active chlorine) for at least 60 seconds. It is necessary to replace a minimum of twice the holdup volume of the module.

- **Downtime > 7 days**

Before the disinfection step is carried out, it is absolutely necessary to clean the membranes from all organic and inorganic impurities (fouling, scaling layer). After the cleaning procedure, rinse with a 0.75% sodium bi-sulfite solution via backwash mode. Use UF-filtrate water quality compliant with the minimum water quality standards according to Drinking Water Ordinance respectively. Leave the sodium bi-sulfite solution in the module. Replace the sodium bi-sulfite solution every 4 weeks.

In either situation, modules stored should be hydraulically filled.

If other biocides/disinfection solutions are to be used, please consult Miranda beforehand and obtain written approval from Miranda with reference to the chemicals and the corresponding concentrations for application.

Modules, which have been in use, have to be cleaned thoroughly before storing. Cleaning should be done for the entire system.

Cleaned modules, which will be removed from the system, have to be rinsed with an aqueous preservative (RO-water quality)/glycerin/sodium bi-sulfite solution [74,25:25:0,75 wt%] and sealed in plastic if destined for reuse. Preferably RO or demineralized water, or at least, water with a water quality according to Drinking Water Ordinance should be used for the solution. After that, the connections of the modules must be closed or modules have to be sealed in a plastic foil in case a re-use is intended. Thus, the modules can be stored for another 3 months before the solution would have to be refreshed again.

© 2026 Miranda Water Technologies. All rights reserved.

20.6. Electrical Panel

On the front side of the panel all the controls, indicator lamps and indicators needed for operation are located.

- Main switch on 208 V / 60 Hz + Neutral Line,
- An emergency button to stop the electricity provided from the assisting equipment,
- PLC board is the main board operating and controlling all the system.

NOTE: Do not use the machine before examining this section.

Warning! Never operate or start up the pump without water or without service permission

20.7. General Notes about the Use of Electrical Equipment

- Always comply with the safety rules while opening the electric control boxes and electric motor containers.
- Never work on the moving parts.
- Before executing any maintenance and/ or service operation, be sure that the power is off.
- Always replace the electrical parts and safety devices with the original parts and with the parts and equipment of the same specification.

20.8. General Safety Rules

- Before turning on the machine for the first time, make sure that the nuts and pipe connections are installed and tightened.
- Check if all the metal structures and components are grounded safely and adequately in compliance with the laws regulating the hazards of electric discharge.
- Always be careful before turning on the machine and check the valve positions delicately.
- Before turning on the main switch, never execute any operations on the distribution points of electric units, device boxes and terminal boxes.
- Never execute maintenance or services when the engines are on.
- Do not turn on the voltage charged electric circuits and/ or work on them.
- Always replace the electric components and safety devices (fuses, thermal protectors etc.) with the components and devices having the same quality and specifications.
- Before using the chemicals, read the instructions and comply with all the instructions provided by the supplier, upon their storing, moving and handling and usage.

© 2026 Miranda Water Technologies. All rights reserved.

21. Frequently Asked Questions (FAQ)

What type of wastewater is the system designed to treat?

The system is designed to treat typical domestic (municipal) wastewater generated from homes and community buildings. It is not designed to receive significant industrial waste, hazardous chemicals, fuels, oils, solvents, or other non-domestic wastewater unless specifically approved.

How does the treatment process work?

Wastewater flows through a series of treatment stages including primary settlement, biological treatment using the Miranda MIRACELL® Rotating Biological Contactor (RBC), final settlement and clarification, filtration (where applicable), disinfection, and treated water storage before final discharge.

What makes the Miranda MIRACELL® RBC different from activated sludge systems?

Unlike activated sludge systems, the Miranda MIRACELL® RBC uses rotating biological media that naturally grow beneficial microorganisms. This eliminates the need for large aeration blowers, significantly reducing energy consumption, operator attention, noise, routine maintenance and space requirement.

What are the rotating discs doing?

Rotating discs, with their patterned surface structure, provide a surface area where biofilm, which plays the most important role in wastewater treatment, can adhere, reproduce, and multiply, while also allowing for the control of biofilm thickness to deliver the most efficient treatment performance.

The discs slowly rotate through wastewater and air. Beneficial microorganisms naturally grow on the disc surfaces, consuming organic matter and ammonia while receiving oxygen every time the discs rotate into the air.

Is the biological process dangerous?

No. The microorganisms are naturally occurring bacteria that exist in domestic wastewater. They are essential to the treatment process and pose no unusual hazard when normal wastewater safety procedures are followed.

The biological process is an exact replica of the matter cycle that occurs in nature. Biological treatment processes are applications that mimic natural decomposition, allowing it to occur in the most efficient, safe, simple, and economical way possible.

What happens if the power goes out?

© 2026 Miranda Water Technologies. All rights reserved.

Biodisk processes do not require oxygen supply via blower equipment during bacterial growth, so the biofilm layer adhering to the surface continues to be in contact with both water and atmospheric oxygen. Even when the discs are completely stopped and half of the biofilm is outside the water, the biofilm layer is resistant to loss of activity for 12-24 hours.

During a power outage, wastewater continues to enter the plant while mechanical equipment temporarily stops operating. Once power is restored, the plant automatically resumes normal operation. Extended power outages should be reported and monitored.

How long can the system operate without power?

The acceptable outage duration depends on wastewater loading, temperature, and available storage volume. Short interruptions generally have little impact, while extended outages may temporarily reduce treatment performance until the biological process fully recovers.

Condition	Estimated Survival Time
Discs completely stopped - Biofilm exposed to Air	12-24 Hours
Discs completely stopped - Biofilm submerged	2-8 hours
Nitrification RBC	2-6 hours
Carbon removal (MIRACELL only)	8 - 24 hours
Ambient Temperature >25	Survival time may decrease 30-50%
Ambient Temperature <15	Survival time may increase 30 - 50% but biological recovery will be slower after restart.

In practice, power outages of **up to 6–12 hours** generally have little impact on the biological treatment process, provided the biofilm remains moist. Between **12 and 24 hours**, biological activity may begin to decline, with the first effects typically observed in the nitrification process. If the outage extends to **24–48 hours**, significant reductions in microbial activity can occur, particularly among the more sensitive nitrifying bacteria, resulting in reduced treatment performance. Following outages of **more than 48 hours**, a substantial portion of the biofilm may become inactive or die, and the treatment process may require between 3 - 21 days to biologically recover, depending on wastewater characteristics, temperature, and operating conditions.

Does the plant require continuous operator attendance?

© 2026 Miranda Water Technologies. All rights reserved.

No. The plant is designed for automated operation using the SmartCell™ control system. However, daily inspections, routine maintenance, laboratory sampling, and preventative maintenance remain essential for reliable operation.

How often should the plant be inspected?

Operators should visually inspect the plant daily. This includes checking equipment operation, alarm conditions, wastewater flows, unusual odours, housekeeping, chemical levels (where applicable), and the overall condition of the facility.

What should I do if an alarm appears?

Review the alarm description on the SmartCell™ HMI, determine the cause of the alarm, correct the issue where possible, acknowledge the alarm, record the event in the operating log, and contact Miranda Water Technologies if the alarm cannot be resolved.

Will the plant automatically restart after an alarm?

Many alarms automatically reset once the underlying condition has been corrected. Certain equipment faults may require operator acknowledgement or manual reset before normal operation resumes.

What could enter the wastewater system that could cause an issue?

Certain materials can negatively affect the biological treatment process, damage equipment, or increase maintenance requirements. The following materials should not be discharged into the wastewater system:

- Excessive grease or cooking oils
- Acidic or basic liquids in sufficient quantities to raise the wastewater pH outside the 6-8 range.
- Rainwater and pool backwash waters with unknown flow rates and pollution levels.
- Paints or solvents
- Fuels or petroleum products
- Pesticides and herbicides
- Pharmaceuticals in large quantities
- "Flushable" wipes or paper towels
- Feminine hygiene products
- Diapers
- Cat litter
- Large quantities of bleach or disinfectants
- Construction debris, sand, gravel, or concrete wash water
- Rags, plastics, or other non-biodegradable materials

© 2026 Miranda Water Technologies. All rights reserved.

Keeping these materials out of the sewer system helps protect the biological process and ensures long-term reliable operation.

Why is excessive grease a problem?

Excessive grease can solidify inside pipes, pumps, and tanks, causing blockages, increasing maintenance, and reducing treatment performance. Grease can also coat the biological media and reduce the microorganisms' ability to efficiently treat wastewater.

In general, when an oil film in wastewater reaches the biological treatment stage of any wastewater treatment process, it can cover the surface due to the lower density of oil compared to water, hindering the natural transfer of oxygen from the atmosphere into the wastewater and significantly negatively impacting the efficiency of aerobic treatment.

Does cold weather affect treatment?

The biological treatment process naturally slows as wastewater temperatures decrease. However, the Miranda MIRACELL® system has been specifically designed for Canadian climates and can continue to provide effective treatment at wastewater temperatures as low as **10°C**, provided the plant is operated and maintained in accordance with this Operations Manual.

MIRACELL® RBC modules are manufactured from fiberglass reinforced plastic (FRP), which has relatively low thermal conductivity compared to conventional construction materials such as steel or concrete. As a result, the FRP structure helps reduce heat transfer between the wastewater and the surrounding environment, thereby limiting heat losses during cold weather conditions.

Although the modules are not intended to provide complete thermal insulation, the reduced heat transfer assists in maintaining the wastewater temperature closer to its original value, which contributes positively to the stability and efficiency of the biological treatment process, particularly under low ambient temperature conditions.

This inherent thermal resistance of the FRP structure provides an additional operational advantage for RBC applications in cold climates by helping to maintain more stable biological treatment conditions.

Why is sludge removed from the system?

The biological treatment process continuously produces excess biomass (sludge). Removing this sludge on a regular basis maintains treatment efficiency, prevents solids carryover, and helps ensure consistent effluent quality.

It is also crucial to create surface area on the RBC discs for the new biofilm to grow, and to ensure that the effective area is continuously provided.

How often is sludge removed?

© 2026 Miranda Water Technologies. All rights reserved.

Sludge removal frequency depends on wastewater loading and plant operation. Operators should follow the sludge management schedule established for the facility and adjust removal frequency based on operating conditions and laboratory results.

What water quality does the plant produce?

When operated in accordance with this Operations Manual, the plant is designed to consistently achieve the treated effluent quality specified in the **Process Design Report**, while meeting the requirements of the Environmental Compliance Approval (ECA) and all applicable provincial regulations.

Why are laboratory samples required if everything appears to be working?

Water quality cannot be determined by appearance alone. Laboratory testing confirms regulatory compliance, verifies treatment performance, and provides early warning of developing process issues before they become operational problems.

By regularly taking samples of the influent wastewater and the final treated water discharged from the plant at the same time intervals and at specified frequencies, the efficiency of the wastewater treatment plant can be reliably controlled through continuous mathematical monitoring. This ensures maximum benefit from your treatment plant and guarantees sustainable effluent quality.

What routine maintenance should the Operator perform?

Routine Owner maintenance includes:

- Daily visual inspections
- Cleaning screens and strainers (where applicable)
- Recording operating data
- Reviewing alarms
- General housekeeping
- Monitoring chemical levels (where applicable)
- Lubrication and minor adjustments
- Collecting samples and recording laboratory results

Quarterly preventative maintenance is typically performed by Miranda Water Technologies or an authorized service provider under a maintenance agreement.

Can heavy rain affect plant performance?

Yes. Excessive inflow and infiltration into the collection system can temporarily increase plant flow while diluting wastewater strength. Although the plant has been designed to accommodate normal hydraulic variations, excessive inflow should be minimized wherever possible.

© 2026 Miranda Water Technologies. All rights reserved.

Therefore, instead of combined collection systems where wastewater and rainwater are collected and transported together, separate sewer systems where wastewater and rainwater are collected and transported separately are preferred in wastewater treatment plants.

Why is odour control important?

A properly operating wastewater treatment plant should produce very little odour. Persistent odours may indicate insufficient oxygen transfer, excessive sludge accumulation, equipment malfunction, or upstream sewer issues that require investigation.

Wastewater, by its very nature, provides an environment conducive to odor formation. In MIRACELL® systems, since the wastewater flow and its processing within the system are continuous and uninterrupted, unpleasant odor formation should not be observed either in the process stages from the plant's inlet to its outlet, or in the treated water (maintenance and operating conditions have a determining effect).

What information should be recorded in the operating log?

Operators should record:

- Daily inspections
- Flow readings
- Equipment operating status
- Alarm events
- Maintenance activities
- Laboratory results
- Sludge removal activities and durations
- Chemical usage (where applicable)
- Any unusual observations or corrective actions

Maintaining accurate records supports regulatory compliance, troubleshooting, preventative maintenance, and long-term plant performance.

When should Miranda Water Technologies be contacted?

Miranda Water Technologies should be contacted whenever:

- Critical alarms cannot be cleared
- Equipment failures occur
- Treatment performance declines
- Major components require repair or replacement
- Process modifications are being considered
- Additional operator training or technical support is required

© 2026 Miranda Water Technologies. All rights reserved.

Can the plant be expanded in the future?

Yes. One of the key advantages of the Miranda MIRACELL® wastewater treatment system is its modular and highly scalable design. The MIRACELL® platform can be expanded to treat wastewater flows serving communities of up to approximately 10,000 people, making it well suited for long-term community growth.

The The SmartCell™ wastewater treatment plant was specifically designed with future expansion in mind. While the current installation meets the community's present wastewater requirements. The system can range from 50 m3 to 2,000 m3. Any future expansion should be reviewed with Miranda Water Technologies to confirm equipment additions, process requirements, and applicable regulatory approvals.

What is the most important thing an operator can do?

Consistent daily observation is the single most important responsibility of the operator. Most operational issues can be identified early through regular inspections, good housekeeping, accurate record keeping, and prompt response to alarms before they become significant problems.

What personal protective equipment (PPE) should be worn?

Operators should wear appropriate PPE for the work being performed, including safety boots, gloves, eye protection, high-visibility clothing, hearing protection where required, and any additional equipment specified by the facility's health and safety procedures.

If chemicals are to be used, attention should also be paid to the protective equipment and precautions specified in the MSDS forms of the relevant chemicals. For these precautions, it would be beneficial to contact the companies supplying the chemical materials and obtain information about the necessary measures.

What should I do before entering a tank or confined space?

Never enter a confined space unless all applicable confined space entry procedures have been completed, including hazard assessment, atmospheric testing, ventilation, entry permitting, rescue planning, and the use of trained personnel.

Additionally, securing the wastewater treatment plant with coded or locked doors to prevent unauthorized and unqualified individuals from entering will prevent negative situations from arising.

Why is housekeeping important?

A clean wastewater treatment plant is a safer and more reliable facility. Keeping equipment, walkways, drains, and work areas clean helps identify leaks early, reduces slip and trip hazards, improves equipment life, and makes maintenance activities safer and more efficient.

Who should operators contact if they have questions?

© 2026 Miranda Water Technologies. All rights reserved.

Operators should first consult this Operations Manual, the equipment manuals, and the Process Design Report. If additional assistance is required, they should contact their supervisor or Miranda Water Technologies Technical Support for further guidance.

© 2026 Miranda Water Technologies. All rights reserved.

Appendix A - Sample Equipment Data Sheets and Integration Notes

A.0 Purpose of This Appendix

The equipment data sheets contained in this appendix are provided as representative examples of the information that will be included in the final project documentation. Equipment selections, capacities, instrumentation, electrical characteristics, and control parameters shown in these tables are intended for planning and reference purposes only.

As part of the detailed engineering phase, Miranda Water Technologies will prepare a complete set of project-specific equipment data sheets based on the approved Process Design Report (PDR), final equipment selections, regulatory requirements, and the Issued-for-Construction (IFC) design package. These final data sheets will form part of the Operations and Maintenance Manual and will supersede the sample information contained in this document.

A.1 Guidance for Operators, Designers, and Reviewers

During plant operation, maintenance activities, spare parts requests, and troubleshooting should always reference the **project-specific equipment tag numbers** contained in the final documentation rather than generic equipment descriptions.

During commissioning, all equipment nameplate information, electrical characteristics, operating limits, and control parameters should be verified against the installed equipment, approved electrical drawings, PLC programming, and final control narratives.

Pump operating data, instrument calibration values, normal operating currents, pressure readings, valve positions, and control sequences established during commissioning should be considered the operating baseline for future maintenance and performance monitoring.

A.2 Project-Specific Equipment Data Sheets

Prior to project completion, this appendix will be updated to include the final equipment schedules and data sheets for all major process equipment, including but not limited to:

- Pumps
- Blowers
- Mixers
- Rotating Biological Contactors (RBCs)

© 2026 Miranda Water Technologies. All rights reserved.

- Lamella Clarifiers
- Sand Filters
- Ultra Filtration Systems
- UV Disinfection Systems
- Instrumentation
- Valves and Actuators
- SmartCell™ Control System Components

These data sheets will include final manufacturer information, equipment model numbers, capacities, motor ratings, electrical requirements, instrumentation, control integration details, spare parts information, and maintenance recommendations specific to the completed installation.

A.1 MIRACELL® Rotating Biological Contactor

(MRC-101 / MRC-102 / future MRC-103 / MRC-104)

EQUIPMENT DATA SHEET			
Project	{Project Name}	**Tag No.**	MRC-101 / MRC-102 / MRC-103 / MRC-104 (For future expansion)
Equipment	MIRACELL® Rotating Biological Contactor (RBC)	**Date**	May 2026
Prepared by	Miranda Water Technologies	**Rev**	0

GENERAL INFORMATION			
Manufacturer	Miranda Water Technologies	**Brand / Model**	MIRACELL® RBC
Type	Rotating Biological Contactor (RBC)	**Technology**	Fixed-Film Biological — Biodisk
Application	Secondary Biological Wastewater Treatment	**Installation**	1,200+ installations / 40+ countries
Scope	Miranda supply	**Standards**	The system is designed to comply with Canadian WSER requirements and Ontario MECP/ECA effluent or equivalent objectives.

PROCESS DESCRIPTION	
Operating Principle	Closely spaced high-density polyethylene (HDPE) biodisks mounted on a solid horizontal shaft (C1050) rotate slowly while 40% submerged. Aerobic biofilm forms on disk surfaces. Organisms

© 2026 Miranda Water Technologies. All rights reserved.

	metabolize organic matter by cycling between wastewater contact and air exposure, eliminating the need for mechanical aeration.		
Disk Submersion	40% submerged at all times	**Disk Material**	High-Density Polyethylene (HDPE)
Body, Cover & Drum Material	Fibre Reinforced Polyester (FRP)	**Drive**	Electric motor with reduction gearbox
Energy vs. Activated Sludge	Up to 80% less electricity	**Aeration**	Natural atmospheric — no blowers required

EFFLUENT QUALITY			
Parameter	**MIRACELL® Essential**	**MIRACELL® Plus**	**MIRACELL® Ultra**
BOD (mg/L)	45	25	≥20
COD (mg/L)	120	110	90
TSS (mg/L)	45	35	≥10

MIRACELL® MODEL CONFIGURATIONS			
MIRACELL® Ultra	Adds UF, UV Disinfection & optional ACF. Highest quality.	**Components**	RBC, LC, SF, UF, UV

P&ID TAG INFORMATION			
Tags	MRC-101 / MRC-102 MRC-103 / MRC-104	**Symbol**	MRC (MIRACELL® RBC Module)
Process line	Main Process Line (Cyan)	**Connected to**	EQ Tank → RBC → Lamella Clarifier

A.2 Lamella Clarifier CL-101

EQUIPMENT DATA SHEET			
Project:	{Project Name}	**Tag No:**	CL-101
Equipment:	Lamella Clarifier (Inclined Plate Settler)	**Date:**	May 2026
Prepared by:	Miranda Water Technologies	**Rev:**	0
GENERAL INFORMATION			

© 2026 Miranda Water Technologies. All rights reserved.

Type	Lamella Clarifier / Inclined Plate Settler (IPS)	**Quantity**	1
Application	Secondary clarification after RBC biological treatment	**Technology**	Shallow-depth sedimentation with inclined plates
Scope	Miranda supply	**Standard**	Gravity-fed, no moving parts
OPERATING PRINCIPLE			
Description	Parallel plates inclined at 55–60° increase the effective settling surface area by 7–10 times compared to a conventional clarifier. Influent enters below the plates; suspended solids settle onto plate surfaces and slide by gravity to the sludge hopper. Clarified effluent flows over weirs at the top. No power required in the settling zone — no moving parts.		
TECHNICAL SPECIFICATIONS			
Plate Inclination	55°–60°	**Plate Spacing**	50–100 mm
Plate Material	PVC / PP (corrosion-resistant)	**Tank Material**	Carbon steel, epoxy-lined interior
Surface Overflow Rate	1.0–2.5 m/h (design dependent)	**Solids Removal**	TSS reduction ≥ 70–90%
Max. Feed TSS	≤ 3,000 mg/L	**Max. Feed Grease**	≤ 10,000 mg/L
Footprint Saving	65–90% less than conventional clarifier	**Overflow Rate Advantage**	2–4× higher than conventional
PROCESS DATA			
Influent Source	MIRACELL® RBC effluent	**Effluent Destination**	Treated water tank
Sludge Discharge	Gravity to sludge tank (T-105)	**Sludge Concentration**	2–5% TS (design dependent)
Flow Control	Gravity flow — no pump in settler zone	**Cleaning**	Periodic backwash / hose-down of plates. Surface cleaning with Clarifier wash pump
CONSTRUCTION			
Inner Structure	SS316	**Body & Cover Material**	Fibre Reinforced Polyester (FRP)
Plate Pack	Polycarbonate plates	**Sludge Hopper**	Conical bottom — gravity discharge

© 2026 Miranda Water Technologies. All rights reserved.

Outlet Weirs	V-notch / straight weir, SS316	**Inlet Baffle**	Flow distribution baffle at bottom
No Moving Parts	Yes — zero maintenance in settling zone	**Cleaning Access**	Removable plate packs
P&ID TAG INFORMATION			
Tag	CL-101	**Symbol**	LC (Lamella Clarifier)
Process line	Main Process Line (Cyan)	**Connected to**	MRC → CL-101 → SF-101 / Sludge Tank
Wash Pump	P-107 (Barnes SE5 — clarifier wash)	**Sludge Tank**	T-105 (out of Miranda scope)

A.3 Automated Sand Filter SF-101

EQUIPMENT DATA SHEET			
Project	{Project Name}	**Tag No**	SF-101
Equipment	Automated Sand Filter	**Date**	May 2026
Prepared by	Miranda Water Technologies	**Rev**	0
GENERAL INFORMATION			
Type	Pressure Sand Filter (Multi-media / Gravity)	**Quantity**	1
Application	Tertiary filtration polishing after lamella clarification	**Scope**	Miranda design & supply
Configuration	Closed pressure vessel with internal filter media	**3D Model**	Completed
PROCESS DESCRIPTION			
Description	Clarified effluent from the Lamella Clarifier passes downward through a bed of graded filter media (sand and gravel). Fine suspended solids, turbidity, and residual biological floc are trapped within the media bed. When differential pressure across the bed reaches the design setpoint, an automated backwash cycle is initiated, reversing flow and air-scouring to regenerate the media.		

© 2026 Miranda Water Technologies. All rights reserved.

DESIGN PARAMETERS			
Filtration Rate	10 m/h (hydraulic loading)	**Backwash Rate**	40–50 m/h
Filter Media	Graded silica sand (d10 = 0.5–0.8 mm)	**Media Depth**	1,150 mm
Support Gravel	Yes – graded gravel underbed	**Underdrain**	Nozzle plate or lateral system
Operating Pressure	0–6 bar	**Backwash Trigger**	Differential pressure or timed cycle
TSS Removal	≥ 80–95%	**Turbidity Target**	< 1 NTU effluent
MECHANICAL DATA			
Vessel Material	Fiberglass	**Vessel Design**	Vertical pressure vessel
Inlet Connection	DN50	**Outlet Connection**	DN50–DN100
Backwash Pump	P-105 to P-106 (Barnes NGV50)	**Backwash Air**	-
Control	Automated PLC / timer-based backwash	**Valves**	AV-112-113-114-115-116 actuated butterfly valves
P&ID TAG INFORMATION			
Tag	SF-101	**Symbol**	SF (Sand Filter)
Process Line	Main Process Line (Cyan)	**Connected To**	CL-101 → SF-101 → UF-101
Feed Pump	P-103 to P-104	**Backwash Pump**	P-105 to P-106

A.4 Wastewater Feed Pumps P-101 / P-102

EQUIPMENT DATA SHEET			
Project	{Project Name}	**Tag No**	P-101 / P-102
Equipment	Wastewater Feed Pump	**Date**	May 2026
Prepared by	Miranda Water Technologies	**Rev**	0
GENERAL INFORMATION			

© 2026 Miranda Water Technologies. All rights reserved.

Manufacturer	Barnes (Crane Pumps & Systems)	**Model**	ZSGV
Type	Grinder Pump – 3B	**Quantity**	2 (Duty + Standby)
Application	Raw Wastewater Feed to EQ Tank	**Installation**	Submersible
HYDRAULIC DATA			
Duty Flow	9.1 m³/hr	**Shutoff Head**	16.5 m
Duty Head	4.99 m	**Shutoff dP**	162 kPa
Operating Speed	3450 rpm	**Sync Speed**	3600 rpm
Max Temperature	71°C (Intermittent)	**Static Head**	0 m
MECHANICAL DATA			
Impeller Diameter	99 mm	**Discharge DN**	DN40 (51 mm)
Sphere Size	N/A	**Fluid**	Wastewater, SG = 1
Fluid Temperature	15.6°C	**Fluid Density**	999 kg/m³
Fluid Viscosity	1.1 cP	**Vapour Pressure**	1.77 kPa a
ELECTRICAL DATA			
Motor	Integral to pump	**Power Supply**	Refer to motor nameplate
VFD Compatible	Confirm with supplier	**Enclosure**	Submersible
STANDARDS & COMPLIANCE			
Catalog	Barnes.60	**Catalog Version**	4/23/20
Selection Date	03/05/2026	**Margin Ratio**	1.0

A.5 Sand Filter / UF Feed and Backwash Pumps P-103 / P-104 / P-105 / P-106

Note: Confirm final tag-to-model mapping before construction closeout or operator training.

© 2026 Miranda Water Technologies. All rights reserved.

EQUIPMENT DATA SHEET			
Project	{Project Name}	**Tag No**	P-103 / P-104P-105 / P-106
Equipment	Sand Filter & Ultrafiltration Feed & Backwash Pump	**Date**	May 2026
Prepared by	Miranda Water Technologies	**Rev**	0
GENERAL INFORMATION			
Manufacturer	Barnes (Crane Pumps & Systems)	**Model**	NGV502 / *NGVH502*
Type	Grinder Pump – 3B	**Quantity**	4 (multiple duties)P-103 / P-104 (Feeding)P-105 / P-106 (Backwash)
Application	Sand Filter & UF Feed / Backwash	**Installation**	Submersible
HYDRAULIC DATA			
Duty Flow	12 m³/hr	**Shutoff Head**	3.34 bar
Duty Head	3 bar	**Shutoff dP**	334 kPa
Operating Speed	3450 rpm	**Sync Speed**	3600 rpm
Max Temperature	40°C	**Static Head**	0 bar
MECHANICAL DATA			
Impeller Diameter	133.35 mm	**Discharge DN**	DN40 (51 mm)
Fluid	Water, SG = 1	**Fluid Temperature**	15.6°C
Fluid Density	999 kg/m³	**Fluid Viscosity**	1.1 cP
Vapour Pressure	1.77 kPa a	**Atm. Pressure**	101 kPa a
PERFORMANCE TABLE			
Flow (m³/hr)	Speed (rpm)	**Head (bar)**	NPSHr (m)
14.4	3450	**2.86**	---
12.0	3450	**3.00**	---

© 2026 Miranda Water Technologies. All rights reserved.

9.6	3450	**3.13**	---
7.2	3450	**3.22**	---
4.8	3450	**3.25**	---
ELECTRICAL DATA			
Motor	Integral to pump	**VFD Compatible**	Confirm with supplier
Catalog	Barnes.60	**Selection Date**	03/05/2026

A.6 Clarifier Wash Pump P-107

EQUIPMENT DATA SHEET			
Project	{Project Name}	**Tag No**	P-107
Equipment	Clarifier Wash Pump	**Date**	May 2026
Prepared by	Miranda Water Technologies	**Rev**	0
GENERAL INFORMATION			
Manufacturer	Barnes (Crane Pumps & Systems)	**Model**	SE5*4L
Type	Sewage Eject — 2-3"-1B	**Quantity**	1
Application	Clarifier Wash / Sludge Transfer	**Installation**	Submersible
HYDRAULIC DATA			
Duty Flow	30 US gpm (6.8 m³/hr)	**Shutoff Head**	18.5 ft (5.6 m)
Duty Head	16 ft (4.9 m)	**Shutoff dP**	8.01 psi (0.55 bar)
Operating Speed	1750 rpm	**Sync Speed**	1800 rpm
Max Temperature	104°F (40°C) Continuous	**Static Head**	0 ft
MECHANICAL DATA			
Impeller Diameter	4.5 in (114.3 mm)	**Discharge**	2 in (DN50)
Sphere Size	1.5 in	**Fluid**	Water, SG = 1

© 2026 Miranda Water Technologies. All rights reserved.

Fluid Temperature	60°F (15.6°C)	**Fluid Density**	62.4 lb/ft³
Fluid Viscosity	1.1 cP	**Vapour Pressure**	0.256 psi a
PERFORMANCE TABLE			
Flow (US gpm)	**Speed (rpm)**	**Head (ft)**	**NPSHr (ft)**
36	1750	15.4	---
30	1750	16.0	---
24	1750	16.6	---
18	1750	17.1	---
12	1750	17.5	---
ELECTRICAL DATA			
Motor	Integral to pump	**VFD Compatible**	Confirm with supplier
Catalog	Barnes.60	**Selection Date**	03/05/2026

A.7 UF Backwash Blower BL-101

EQUIPMENT DATA SHEET			
Project:	{Project Name}	**Tag No:**	BL-101
Equipment:	Ultrafiltration System Aeration Blower for Backwash	**Date:**	May 2026
Prepared by:	Miranda Water Technologies	**Rev:**	0
GENERAL INFORMATION			
Manufacturer	Republic Manufacturing	**Model**	4RC620-H36 / H57
Type	Regenerative Blower	**Quantity**	1
Application	UF Membrane Aeration (Backwash Air)	**Drive**	Direct Drive – impeller on motor shaft
Phase	3-Phase	**Certifications**	IE3, cUL, UL, CE

© 2026 Miranda Water Technologies. All rights reserved.

PERFORMANCE – H36 MODEL (50 Hz)			
Air Flow	97 CFM / 165 m³/hr	**Rated Pressure**	201 in H_2O / 500 mbar
Rated Vacuum	185 in H_2O / 460 mbar	**Motor Power**	4.4 HP / 3.3 kW
Voltage	190 YY / 380 Y V	**Current**	15.0 YY / 7.5 Y A
Frequency	50 Hz	**Sound Level**	71 dB
PERFORMANCE – H36 MODEL (60 Hz)			
Air Flow	115 CFM / 195 m³/hr	**Rated Pressure**	169 in H_2O / 420 mbar
Rated Vacuum	193 in H_2O / 480 mbar	**Motor Power**	5.1 HP / 3.8 kW
Voltage	230 YY / 460 Y V	**Current**	14.2 YY / 8.2 Y A
ECHANICAL DATA			
Construction	Diecast Aluminium	**Lubrication**	Oil-Free
Bearings	Outside compression chamber	**Weight**	106 lb / 48 kg
Outlet Port (ØP)	1.25 in / DN32	**Mounting**	Horizontal or Vertical
DIMENSIONS (mm)			
A (body width)	160 mm	**A' (total length)**	417 mm
B (height)	449 mm	**H (motor length)**	388 mm
C	185 mm	**D**	371 mm
INSTRUMENTATION ON BLOWER LINE			
PI	Pressure Indicator – Aterma F400, 0–2.5 bar, G1/4	**PI-103**	Pressure Switch – Danfoss KP35, G1/4, SPDT
PS	Pressure Switch (local)	**PS-103**	Pressure Switch / On-off control

A.8 Ultrafiltration Skid UF-101

© 2026 Miranda Water Technologies. All rights reserved.

EQUIPMENT DATA SHEET			
Project	{Project Name}	**Tag No.**	UF-101
Equipment	Ultrafiltration Skid (2× APM80T Module)	**Date**	May 2026
Prepared By	Miranda Water Technologies	**Rev.**	0
GENERAL INFORMATION			
Tag	UF-101	**Configuration**	2× APM80T Modules (UFM-201A / UFM-201B)
Type	Hollow-Fibre Ultrafiltration (UF)	**Quantity**	1 Skid (2 UF Tubes)
Application	Tertiary filtration after biological treatment	**Scope**	Miranda supply
PROCESS DATA			
Feed Source	Sand Filter (SF-101) effluent	**Product**	Filtered water to UV / treated water tank
Feed Pump	P-103 to P-104 (Barnes NGV50)	**Backwash Pump**	P-105 to P-106 (Barnes NGV50)
Chemical Dosing	SEKO Tekna EVO metering pumps (CST-101/102/103)	**Aeration**	BL-101 (Republic 4RC620)
INSTRUMENTATION ON UF SKID			
PS-101	Pressure Switch – Danfoss KP35, UF inlet		
CONNECTED EQUIPMENT			
BL-101	Aeration blower (Republic 4RC620)	**T-106**	SF+UF feed tank
P-103-104-105-106	UF feed & backwash pump		
P&ID REFERENCE			
P&ID No.	UF_SKID_2x_APM80T_MODULE	**Revision**	A
Design Basis	Two UF modules in parallel	**Expansion**	Designed for future capacity expansion

© 2026 Miranda Water Technologies. All rights reserved.

A.9 UV Sterilizers UV-101 / UV-102

EQUIPMENT DATA SHEET			
Project	{Project Name}	**Tag No.**	UV-101 / UV-102
Equipment	UV Water Sterilizer	**Date**	May 2026
Prepared By	Miranda Water Technologies	**Rev.**	0
GENERAL INFORMATION			
Manufacturer	Ecoline / AO Smith Waterclinic	**Model**	ECO 100
Type	Low Pressure UV Sterilizer	**Quantity**	2
Application	Final Disinfection – Treated Effluent	**UV Dose Standard**	Min. 30,000 mW·s/cm²
PERFORMANCE DATA			
Flow Rate	10 m³/hr	**UV Dose**	≥ 30,000 mW·s/cm²
Total Power	110 W	**Lamp Type**	Low Pressure Mercury Vapour
Inlet / Outlet	2" (DN50)	**Max. Operating Pressure**	10 bar
Operating Temperature	2 – 40°C	**Efficiency**	99.99% bacteria/virus destruction
DIMENSIONS			
Length	1235 mm	**Width**	135 mm
Height	235 mm	**Connection**	2" / DN50
CONSTRUCTION			
Reactor Body (Std.)	SS304 Stainless Steel	**O-Rings**	Silicone
Control Board	Plastic (standard)	**Welding**	Plasma Arc-Fusion
Reactor Body (Opt.)	SS316 Stainless Steel	**Sight Port**	Yes (Eco 50+)

© 2026 Miranda Water Technologies. All rights reserved.

OPTIONAL FEATURES			
Digital UV Monitor	Yes (Eco 100+)	**Wiper Mechanism**	Yes + PLC Control (Eco 100+)
Hourmeter	Optional	**16 bar Operating Pressure**	Optional – SS316 body required
P&ID TAG INFORMATION			
Tag	UV-101 / UV-102	**Type**	Low Pressure UV Sterilizer
Manufacturer / Model	Ecoline ECO 100	**Power**	110 W / DN50 / 10 m³/hr

A.10 Electric Actuated Butterfly and Ball Valves AV-101 to AV-127

EQUIPMENT DATA SHEET			
Project	{Project Name}	**Tag No**	AV-101 to AV-127
Equipment	Electric Actuated Butterfly & Ball Valves	**Date**	May 2026
Prepared by	Miranda Water Technologies	**Rev**	0
VALVE — GENERAL INFORMATION			
Manufacturer	Proval	**Series**	V101 (Wafer) / V102 (Lug)
Type	Soft Seat Butterfly Valve	**Size Range**	DN25 – DN50
Application	Process Isolation & Control	**Body Material**	Epoxy Coated GGG40 / AISI316
VALVE — TECHNICAL DATA			
Design Standard	EN558 / ISO5752 / API609 / BS5155	**Flange Standard**	EN1092 PN6/10/16, ANSI B16.5
Test Standard	EN12266 / ISO5208 / API598	**Mounting Flange**	ISO 5211
Max. Pressure	16 bar	**Differential Pressure**	16 bar

© 2026 Miranda Water Technologies. All rights reserved.

Vacuum	Max. 0.2 bar absolute	**Leakage Class**	Bubble-tight — ANSI B16-104 Class VI
VALVE — MATERIALS			
Disc	AISI316 Stainless Steel	**Seat Material**	EPDM / NBR / Viton / Silicone
Upper / Lower Stem	AISI420 / AISI316 SS	**Bushing**	Bronze / PTFE
O-Ring	NBR / Viton	**Sealing Ring**	Brass
SEAT TEMPERATURE RANGES			
EPDM	-30°C to +130°C	**NBR**	-20°C to +100°C
Silicone	-30°C to +200°C	**Viton (FKM)**	-15°C to +200°C
ACTUATOR — PROVAL A100COM3005			
Actuator Model	A100COM3005	**Series**	A100 Electric Actuators
Power Supply	220 VAC / 50-60 Hz	**Motor Power**	6 W
Motor Current	0.15 A	**Protection Class**	IP67
Torque Output	50 N·m	**Operating Time**	19 sec (open) / 16 sec (close)
ISO Flange	F03 + F05 + F07	**Shaft**	14×14 mm
Ambient Temperature	-25°C to +60°C	**Certification**	CE
TORQUE REFERENCE (Nm) — PN10 / PN16			
DN50	10 / 12 Nm	**DN80**	26 / 40 Nm
DN100	24 / 44 Nm	**DN150**	60 / 90 Nm

A.11 Pressure Indicators PI-101 / PI-102 / PI-103

EQUIPMENT DATA SHEET			
Project	{Project Name}	**Tag No.**	PI-101 / PI-102 / PI-103

© 2026 Miranda Water Technologies. All rights reserved.

Equipment	Pressure Indicator (Glycerin-Filled Pressure Gauge)	**Date**	May 2026
Prepared By	Miranda Water Technologies	**Rev.**	0
GENERAL INFORMATION			
Manufacturer	Aterma (AK Teknik)	**Model**	F400
Type	Glycerin-Filled Pressure Gauge	**Quantity**	3
Application	Local Pressure Indication – Blower & Process Lines	**Standard**	EN 837-1
TECHNICAL DATA			
Dial Diameter	63 mm or 100 mm	**Accuracy Class**	Cl. 1.6
Measurement Range	0–1 bar to 0–600 bar (selectable)	**Selected Range**	0–2.5 bar (blower line)
Working Pressure (cont.)	3/4 of full scale	**Working Pressure (short-term)**	Full scale
Fluid Temperature	Max +60°C	**Ambient Temperature**	-20°C to +60°C
Protection Class	IP65	**Fill Medium**	Glycerin
CONSTRUCTION MATERIALS			
Case	SS304 Stainless Steel	**Front Cover (Bezel)**	SS304 Stainless Steel (pressed)
Pointer	Black Anodised Aluminium DIN	**Window**	Polycarbonate
Dial	White Aluminium	**Bourdon Tube**	Copper alloy
Mechanism	Copper alloy	**Tube Type**	C-type (< 100 bar)
PROCESS CONNECTION			
63 mm dial	G 1/4 B – 14 mm square key	**100 mm dial**	G 1/2 B – 22 mm hex key
Connection Material	Brass	**Mounting Options**	Bottom / Back / Panel
DIMENSIONS – 63 mm BOTTOM MOUNT			
a	6.50 mm	**b**	32.90 mm
D (outer diameter)	67.50 mm	**d (dial diameter)**	62.35 mm

© 2026 Miranda Water Technologies. All rights reserved.

H (total height)	91.50 mm	**Weight**	0.22 kg
&ID TAG INFORMATION			
Tag	PI-101 / PI-102 / PI-103	**Symbol**	PI (Pressure Indicator)
Signal	Local only – no electrical output	**Power**	None required

A.12 Pressure Switches PS-101 / PS-102 / PS-103

EQUIPMENT DATA SHEET			
Project	{Project Name}	**Tag No.**	PS-101 / PS-102 / PS-103
Equipment	Pressure Switch	**Date**	May 2026
Prepared By	Miranda Water Technologies	**Rev.**	0
GENERAL INFORMATION			
Manufacturer	Danfoss	**Model**	KP 35
Type	Mechanical Pressure Switch (SPDT)	**Quantity**	3
Application	Pressure Alarm / Control – UF & Process Lines	**Code No.**	060-113366 (silver) / 060-504766 (gold)
TECHNICAL DATA			
Setting Range (Pe)	-0.2 to 7.5 bar	**Differential**	0.7 to 4.0 bar
Max. Operating Pressure	17 bar	**Max. Test Pressure**	22 bar
Fluid (KP)	Gaseous media	**Ambient Temperature**	-40°C to +65°C
Media Temperature	-40°C to +100°C	**Process Connection**	G 1/4 A
ELECTRICAL – CONTACT DATA			
Contact System	SPDT – Single Pole Double Throw	**Contact Material**	Silver (standard) / Gold-plated (optional)

© 2026 Miranda Water Technologies. All rights reserved.

AC-1 (Ohmic)	16 A / 400 V	**AC-3 (Motor)**	16 A / 400 V
AC-15 (Electromagnetic)	10 A / 400 V	**DC-13**	12 W / 220 V
Cable Entry	Rubber gland, 6–14 mm cable diameter	**Reset**	Automatic / Manual (versions available)
NCLOSURE OPTIONS			
IP30	Standard – mount on flat surface	**IP44**	With top cover (code: 060-109766)
IP55	Special enclosure (060-033066 or 060-062866)	**Vibration Proof**	0–1000 Hz, 4 g (backplate mount)
MECHANICAL			
Weight	~0.3 kg	**Dimensions**	84 × 44 mm (approx.)
Snap Action	Yes – minimises contact bounce and wear	**Manual Trip**	Yes – for wiring verification
CERTIFICATIONS			
EU Declaration	LVD / EU RoHS	**UL-CSA**	Certificate UL E31024
Marine	DNV, BV, LR, RINA	**ATEX / Zone 2**	Not applicable to this model
P&ID TAG INFORMATION			
Tag	PS-101 / PS-102 / PS-103	**Symbol**	PS (Pressure Switch)
Action	High / Low pressure alarm or cut-out	**Output**	ON/OFF contact (SPDT)
Note	Shown as PS (Pressure Switch) – not PT (Transmitter). Per JLR Item 22 resolution: device is a mechanical switch; P&ID has been updated for consistency.		

A.13 Chemical Dosing Pumps P-108 to P-112

© 2026 Miranda Water Technologies. All rights reserved.

EQUIPMENT DATA SHEET			
Project	{Project Name}	**Tag No.**	P-108 / P-109 / P-110 / P-111 / P-112
Equipment	Chemical Dosing Pump (Solenoid Diaphragm Metering Pump)	**Date**	May 2026
Prepared By	Miranda Water Technologies	**Rev.**	0
GENERAL INFORMATION			
Manufacturer	SEKO (www.seko.com)	**Series**	Tekna EVO
Type	Solenoid Diaphragm Metering Pump	**Quantity**	3 (multiple chemical duties) + 2 (Neutralization)
Application	Chemical Dosing – UF Membrane Chemical Treatment	**Certifications**	CE, EAC
MODEL AKS 803 – HIGH FLOW / LOW PRESSURE			
Model Code	AKS803NHP0000	**Motor Power**	40 W / 0.04 kW
Power Supply	100–240 VAC / 50-60 Hz	**Protection Class**	IP65
Fuse	2A-T	**Connection**	Hose barb fitting
PSI	58	**GPH**	2.9
Bar	4	**L/hr**	11
PSI	29	**GPH**	8.48
Bar	2	**L/hr**	32
PSI	29	**GPH**	16.4
Bar	2	**L/hr**	62
PSI	14.5	**GPH**	29.0
Bar	1	**L/hr**	110
MODEL AKS 200 – LOW FLOW / HIGH PRESSURE			
Model Code	AKS800NHP0000	**Motor Power**	40 W / 0.04 kW
Power Supply	100–240 VAC / 50-60 Hz	**Protection Class**	IP65

© 2026 Miranda Water Technologies. All rights reserved.

Fuse	2A-T	**Connection**	Hose barb fitting
PSI	232	**GPH**	1.32
Bar	16	**L/hr**	10
PSI	145	**GPH**	2.64
Bar	10	**L/hr**	10
PSI	72.5	**GPH**	3.30
Bar	5	**L/hr**	11
PSI	14.5	**GPH**	14.75
Bar	1	**L/hr**	12
P&ID TAG INFORMATION			
Tags	P-108-109-110-111-112	**Symbol**	P (Dosing Pump)
Output Signal	None (manual control)	**PLC Integration**	Optional 4–20 mA input version
Chemical Line Colour	Purple (P&ID legend)	**Process Line**	Chemical Dosage Line

A.14 Additional Integration Notes for Final O&M Issue

Topic	Editable Integration Guidance
RBC / MIRACELL® modules	The MIRACELL® modules provide fixed-film biological treatment. Because oxygen transfer occurs by disk rotation and atmospheric exposure, do not describe BL-101 as an RBC process aeration blower. BL-101 is dedicated to UF air scour/backwash air service.
Lamella clarification	CL-101 is a gravity-settling device with no moving parts in the settling zone. Routine housekeeping, plate inspection, sludge removal, and P-107 wash pump use are the main operating concerns.
Sand filter and UF train	P-103/P-104 feed the tertiary train. P-105/P-106 support UF backwash/cleaning duty. The operating sequence must confirm correct valve positions before pump start to avoid dead-heading or no-flow conditions.
Pressure devices	PI devices are local visual indicators only. PS devices are mechanical on/off pressure switches. PT/PIT transmitters should only be referenced where an analog pressure transmitter is actually installed.

© 2026 Miranda Water Technologies. All rights reserved.

Chemical dosing pumps	The SEKO dosing pump data is retained because UF chemical treatment and neutralization duties may be required during membrane cleaning. Final chemical names, dosing setpoints, concentrations, storage arrangement, and SDS references should be added before final operator issue.
Valves and actuator controls	The AV-101 to AV-127 valve data should be reviewed against the final P&ID, wiring diagram, and PLC sequence. Any valve used as a permissive or interlock should have its feedback state verified during commissioning.

Appendix B - Pump Curves / Manuals

Pump curves are included because they define the selected hydraulic performance and must be used when verifying whether an installed pump is performing as expected. Always compare the curve to the actual installed pump nameplate and final system hydraulics.

B.1 P-101 / P-102 Wastewater Feed Pump Curve

© 2026 Miranda Water Technologies. All rights reserved.

Pump Data Sheet - Crane Barnes.60

Company:
Name:
Date: 03/05/2026

BARNES

Pump:

Size:	ZSGV	Dimensions:	
Type:	Grinder - 3B	Suction:	---
Synch Speed:	3600 rpm	Discharge:	51 mm
Dia:	99 mm		
Curve:	---		

Fluid:

Name:	Water		
SG:	1	Vapor Pressure:	1.77 kPa a
Density:	999 kg/m³	Atm Pressure:	101 kPa a
Viscosity:	1.1 cP		
Temperature:	15.6 °C	Margin Ratio:	1

Pump Limits:

Temperature:	40 °C	Sphere Size:	---
Wkg Pressure:	---		

Search Criteria:

Flow:	9 m³/hr	Near Miss:	---
Head:	4.877 m	Static Head:	0 m

Motor:

Motor is integral to the pump except in 4A, 4B, and 5B catalog sections.

Pump Selection Warnings:
None

--- Duty Point ---	
Flow:	9.1 m³/hr
Head:	4.99 m
Eff:	---
Power:	--- kW
NPSHr:	---
Speed:	3450 rpm
--- Design Curve ---	
Shutoff Head:	16.5 m
Shutoff dP:	162 kPa
Min Flow:	--- m³/hr
BEP: --- %	
NOL Power: ---	
--- Max Curve ---	
Max Power: ---	

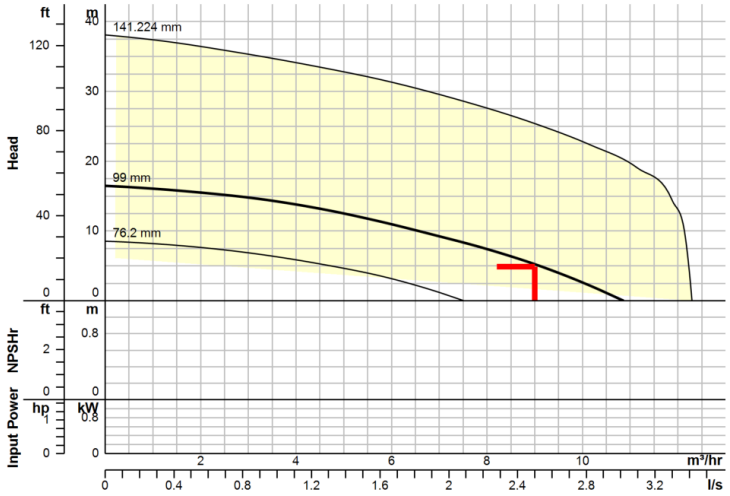

Temp. 160ï¿½F (71ï¿½C) Intermittent.

Performance Evaluation:

Flow	Speed	Head	Efficiency	Power	NPSHr
m³/hr	rpm	m	%	kW	m
10.8	3450	0.181	---	---	---
9	3450	5.21	---	---	---
7.2	3450	8.87	---	---	---
5.4	3450	11.9	---	---	---
3.6	3450	14.2	---	---	---

Selected from catalog: Barnes.60, Vers 4/23/20

B.2 P-103 / P-104 Sand Filter and UF Feed Pump Curve

© 2026 Miranda Water Technologies. All rights reserved.

Pump Data Sheet - Crane Barnes.60

Company:
Name:
Date: 03/05/2026

BARNES

Pump:

Size:	NGV50*2 / NGVH50*2	Dimensions:	
Type:	Grinder - 3B	Suction:	---
Synch Speed:	3600 rpm	Discharge:	51 mm
Dia:	133.35 mm		
Curve:	---		

Fluid:

Name:	Water		
SG:	1	Vapor Pressure:	1.77 kPa a
Density:	999 kg/m³	Atm Pressure:	101 kPa a
Viscosity:	1.1 cP		
Temperature:	15.6 °C	Margin Ratio:	1

Pump Limits:

Temperature:	40 °C	Sphere Size:	---
Wkg Pressure:	---		

Search Criteria:

Flow:	12 m³/hr	Near Miss:	5% of Head
Head:	3 bar	Static Head:	0 bar

Motor:

Motor is integral to the pump except in 4A, 4B, and 5B catalog sections.

Pump Selection Warnings:

--- Duty Point ---

Flow:	12 m³/hr
Head:	3 bar
Eff:	---
Power:	--- kW
NPSHr:	---
Speed:	3450 rpm

--- Design Curve ---

Shutoff Head:	3.34 bar
Shutoff dP:	334 kPa
Min Flow:	--- m³/hr

BEP: --- %
NOL Power:

--- Max Curve ---

Max Power:

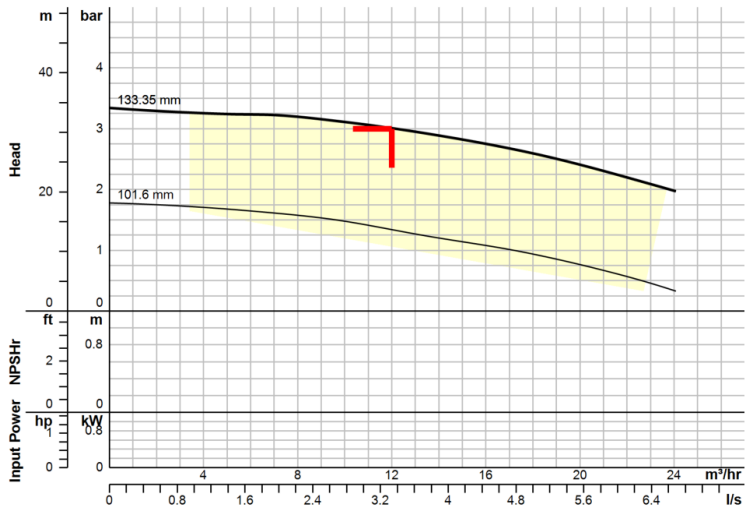

Performance Evaluation:

Flow	Speed	Head	Efficiency	Power	NPSHr
m³/hr	rpm	bar	%	kW	m
14.4	3450	2.86	---	---	---
12	3450	3	---	---	---
9.6	3450	3.13	---	---	---
7.2	3450	3.22	---	---	---
4.8	3450	3.25	---	---	---

Selected from catalog: Barnes.60, Vers 4/23/20

B.3 P-105 / P-106 UF Backwash Pump Curve

© 2026 Miranda Water Technologies. All rights reserved.

Pump Data Sheet - Crane Barnes.60

Company:
Name:
Date: 03/05/2026

BARNES

Pump:

Size:	NGVHH100*2	Dimensions:	
Type:	Grinder - 3B	Suction:	---
Synch Speed:	3600 rpm	Discharge:	64 mm
Dia:	156 mm		
Curve:	---		

Fluid:

Name:	Water		
SG:	1	Vapor Pressure:	1.77 kPa a
Density:	999 kg/m³	Atm Pressure:	101 kPa a
Viscosity:	1.1 cP		
Temperature:	15.6 °C	Margin Ratio:	1

Search Criteria:

Flow:	28.8 m³/hr	Near Miss:	5% of Head
Head:	3 bar	Static Head:	0 bar

Pump Limits:

Temperature:	40 °C	Sphere Size:	---
Wkg Pressure:	---		

Motor:

Motor is integral to the pump except in 4A, 4B, and 5B catalog sections.

Pump Selection Warnings:
None

--- Duty Point ---

Flow:	29.1 m³/hr
Head:	3.06 bar
Eff:	---
Power:	--- kW
NPSHr:	---
Speed:	3450 rpm

--- Design Curve ---

Shutoff Head:	4.5 bar
Shutoff dP:	450 kPa
Min Flow:	--- m³/hr

BEP: --- %
NOL Power:

--- Max Curve ---

Max Power:

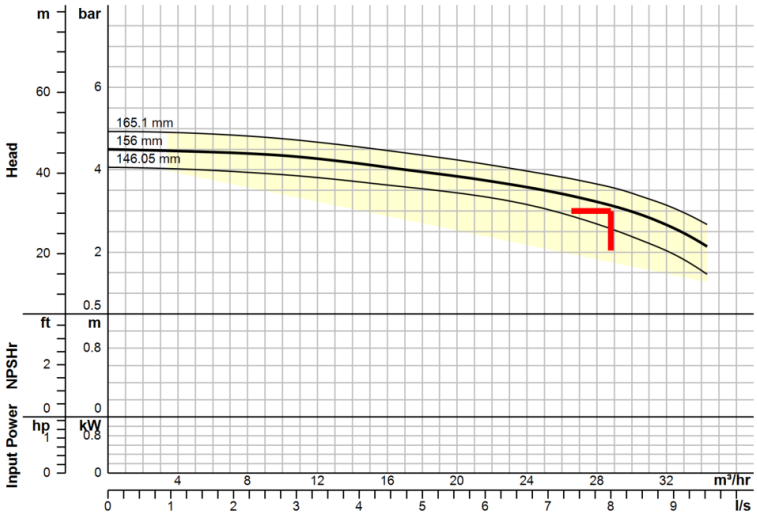

Performance Evaluation:

Flow	Speed	Head	Efficiency	Power	NPSHr
m³/hr	rpm	bar	%	kW	m
34.6	3450	---	---	---	---
28.8	3450	3.09	---	---	---
23	3450	3.64	---	---	---
17.3	3450	3.99	---	---	---
11.5	3450	4.29	---	---	---

Selected from catalog: Barnes.60, Vers 4/23/20

B.4 P-107 Clarifier Wash Pump Curve

© 2026 Miranda Water Technologies. All rights reserved.

Pump Data Sheet - Crane Barnes.60

Company:
Name:
Date: 03/05/2026

BARNES

Pump:

Size:	SE5*4L	Dimensions:	
Type:	Sewage Eject 2-3"-1B	Suction:	---
Synch Speed:	1800 rpm	Discharge:	2 in
Dia:	4.5 in		
Curve:	V104871		

Fluid:

Name:	Water		
SG:	1	Vapor Pressure:	0.256 psi a
Density:	62.4 lb/ft³	Atm Pressure:	14.7 psi a
Viscosity:	1.1 cP		
Temperature:	60 °F	Margin Ratio:	1

Pump Limits:

Temperature:	104 °F	Sphere Size:	1.5 in
Wkg Pressure:	---		

Search Criteria:

Flow:	30 US gpm	Near Miss:	---
Head:	16 ft	Static Head:	0 ft

Motor:

Motor is integral to the pump except in 4A, 4B, and 5B catalog sections.

Pump Selection Warnings:

None

--- Duty Point ---

Flow:	30 US gpm
Head:	16 ft
Eff:	---
Power:	--- hp
NPSHr:	---
Speed:	1750 rpm

--- Design Curve ---

Shutoff Head:	18.5 ft
Shutoff dP:	8.01 psi
Min Flow:	--- US gpm

BEP: --- %
NOL Power:

--- Max Curve ---

Max Power:

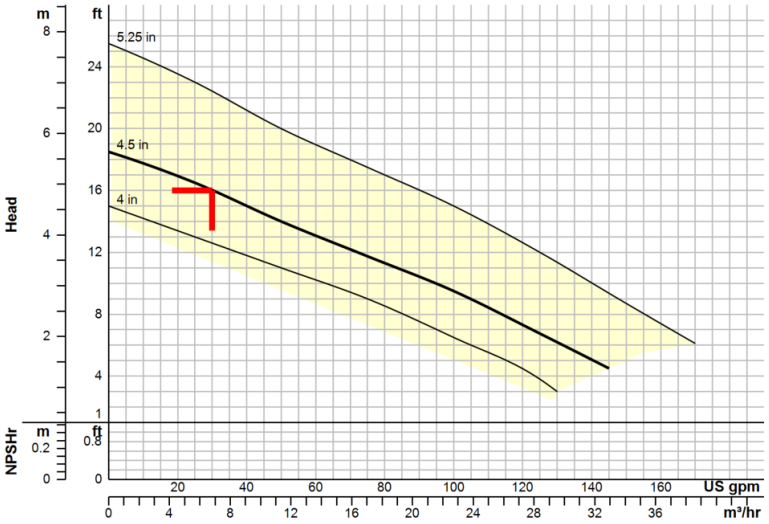

Temp. 104ï¿½F (40ï¿½C) Continous.

Performance Evaluation:

Flow	Speed	Head	Efficiency	Power	NPSHr
US gpm	rpm	ft	%	hp	ft
36	1750	15.4	---	---	---
30	1750	16	---	---	---
24	1750	16.6	---	---	---
18	1750	17.1	---	---	---
12	1750	17.5	---	---	---

Selected from catalog: Barnes.60, Vers 4/23/20

© 2026 Miranda Water Technologies. All rights reserved.

Appendix C - Republic 4RC620 Blower Datasheet

C.1 Republic 4RC620 Blower Datasheet Page 1

REPUBLIC MANUFACTURING

4RC620
REGENERATIVE BLOWERS

Republic offers a complete line of regenerative blowers for high vacuum or compressed air applications in both horizontal and vertical mounted positions. TEFC motors are rated for 50/60 Hz operation and are IE3, cUL, UL, and CE certified. The impeller is directly connected to the motor shaft, providing powerful air force without undue friction. The bearings are outside the compression chamber, ensuring maximum operational reliability under high differential pressure. Constructed in robust die-cast aluminum, this low-maintenance, oil-free design provides continuous, dependable service to our customers.

IE3
CC339B
CE
c UL us
E493872



PERFORMANCE

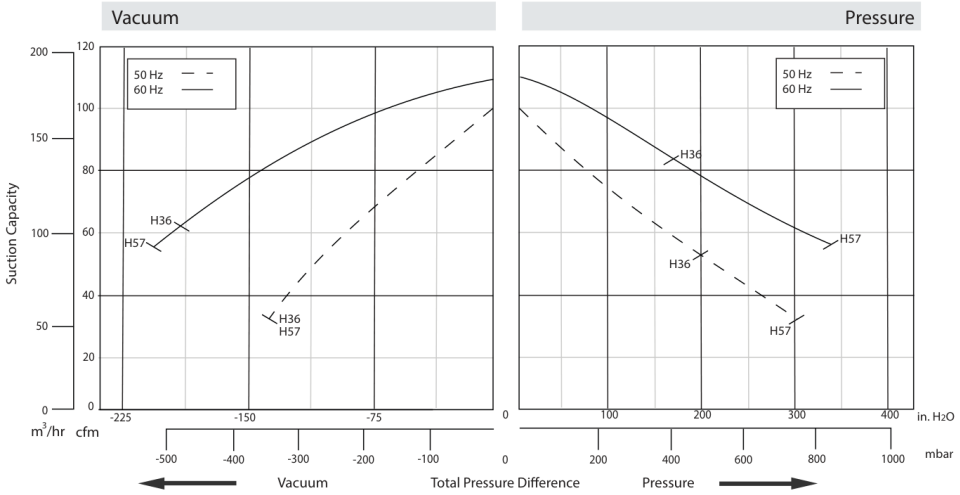

Model	Phase	Frequency (Hz)	Air flow (CFM/m³/hr)	Rated Vacuum (in. H_2O/mbar)	Rated Pressure (in. H_2O/mbar)	Motor (HP/kW)	Voltage (V)	Current (A)	Sound Level (dB)	Weight (lb/kg)
4RC620-H36	3	50	97/165	185/460	201/500	4.4/3.3	190 YY/380 Y	15.0 YY/7.5 Y	71	106/48
		60	115/195	193/480	169/420	5.1/3.8	230 YY/460 Y	14.2 YY/8.2 Y		
4RC620-H57	3	50	97/165	185/460	297/740	7.6/5.7	190 △△/380 △	21.7 △△/12.5 △	72	144/65
		60	115/195	209/520	337/840	8.8/6.6	230 △△/460 △	20.8 △△/12.4 △		

The performance curves are based on air at a temperature of 59 °F and an atmospheric pressure of 29.91 inch Hg with a tolerance of +/-10%. The total pressure differences are valid for inlet and ambient temperatures up to 77 °F. Suction capacity relates to inlet conditions. Pressure capacity relates to atmospheric conditions. For other conditions please contact Republic. Three phase motor tolerances are +/-10% for fixed voltage motors and +/-5% for voltage range motors. Single phase machines are designed with a +/-5% tolerance. The frequency tolerance is +/-2% maximum.

©Republic Manufacturing

© 2026 Miranda Water Technologies. All rights reserved.

C.2 Republic 4RC620 Blower Datasheet Page 2

APPROXIMATE DIMENSIONS

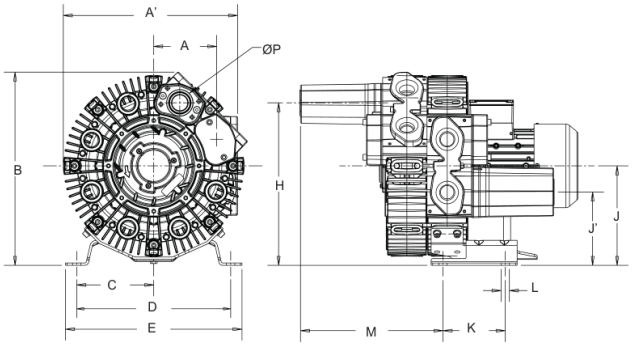

Model	Unit	A	A'	B	C	D	E	H	J	J'	K	L	M	ØP
4RC620	in	6.02	16.43	17.68	7.30	14.61	15.98	15.27	9.27	6.86	5.98	0.55	10.16	1.25
	mm	160	417	449	185	371	406	388	235	174	152	14	258	

Available Options

All Republic Regenerative Blowers are available in pre-assembled kits for either pressure or vacuum applications. These kits include an inlet filter, gauge and relief valve, and are factory tested prior to shipment. Optional items for these kits include check valve, and tube adaptor; washdown motors, explosion proof motors, or other specialty motors; noise enclosures; and control panels such as VFD's, PLC's, or starter panels.

VACUUM KIT

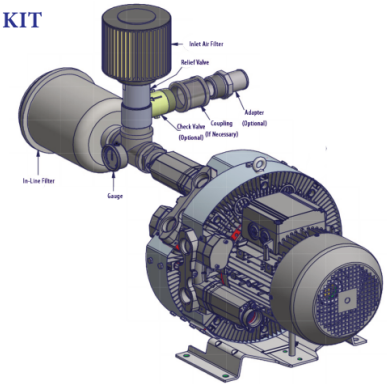

PRESSURE KIT

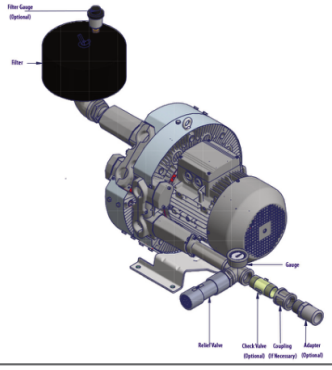

REPUBLIC MANUFACTURING

©Republic Manufacturing • Revised 20200811

5131 Cash Road, Dallas, TX 75247, USA
800.847.0380 • info@republic-mfg.com • republic-mfg.com

© 2026 Miranda Water Technologies. All rights reserved.

Appendix D - Pressure Transmitter Reference

D.1 Danfoss MBS 1700 / 1750 Page 1

ENGINEERING TOMORROW

Data Sheet

Pressure transmitter
Type **MBS 1700** and **MBS 1750**

For general purpose



The compact pressure transmitters MBS 1700 and MBS 1750 are designed for use as a general purpose transmitter, and offers a reliable pressure measurement, even under harsh environmental conditions.

The version MBS 1750 with integrated pulse-snubber is designed for use in applications with severe medium influences like cavitation, liquid hammer or pressure peaks and offers a reliable pressure measurement, even under harsh environmental conditions.

Excellent vibration stability, robust construction, and a high degree of EMC / EMI protection equip the pressure transmitter to meet the most stringent industrial requirements.

Features

- Enslosure and wetted parts of acid-resistant stainless steel (AISI 316L)
- Pressure ranges in relative (gauge) from 0 – 25 bar
- Output signal: 4 – 20 mA
- Pressure connections:
  - G 1/4A & G 1/2A EN837 (MBS 1700)
  - G 1/4 DIN 3852-E, Gasket DIN 3869-15 (MBS 1750)
- Fully digitally compensated

AI309034611216en-000201

© 2026 Miranda Water Technologies. All rights reserved.

D.2 Danfoss MBS 1700 / 1750 Page 2

Pressure transmitter, Type MBS 1700 and MBS 1750

Application

Application and media conditions (MBS 1750)

Figure 1: MBS 1750

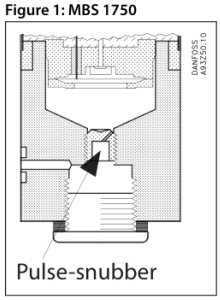

Application
Cavitation, liquid hammer and pressure peaks may occur in liquid filled systems with changes in flow velocity, e.g. fast closing of a valve or pump starts and stops. The problem may occur on the inlet and outlet side, even at rather low operating pressures.

Media condition
Clogging of the nozzle may occur in liquids containing particles. Mounting the transmitter in an upright position minimizes the risk of clogging, because the flow in the nozzle is limited to the start-up period until the dead volume behind the nozzle orifice is filled. The media viscosity has only little effect on the response time. Even at a viscosities up to 100 cSt, the response time will not exceed 4 ms.

© Danfoss | Climate Solutions | 2021.02

© 2026 Miranda Water Technologies. All rights reserved.

D.3 Danfoss MBS 1700 / 1750 Page 3

Pressure transmitter, Type MBS 1700 and MBS 1750

Product specification

Technical data

Table 1: Performance (EN 60770)

Features		Description
Accuracy (incl. non-linearity, hysteresis and repeatability)		≤ ± 0.5% FS (typ.)
		≤ ± 1.0% FS (max.)
Non-linearity BFSL (conformity)		≤ ± 0.2% FS
Hysteresis and repeatability		≤ ± 0.1% FS
Thermal zero point shift		≤ ± 0.1% FS/10K (typ.)
		≤ ± 0.2% FS/10K (max.)
Thermal sensitivity (span) shift		≤ ± 0.1% FS/10K (typ.)
		≤ ± 0.2% FS/10K (max.)
Response time	Air and gases (MBS 1700)	< 4 ms
	Air and gases (MBS 1750)	< 35 ms
Overload pressure (static)		6 × FS (max. 1500 bar)
Burst pressure		6 × FS (max. 2000 bar)
Power-up time		< 50 ms
Durability, P: 10 – 90% FS		> 10 × 10^6 cycles

Table 2: Electrical specifications

Features	Description
Nom. output signal (short-circuit protected)	4 – 20 mA
Supply voltage [U_B], polarity protected	9 – 32 V d.c.
Supply – current consumption	–
Supply voltage dependency	≤ ± 0.1% FS/10 V
Current limitation	22.4 mA (typ.)
Output impedance	–
Load [R_L] (load connected to 0 V)	$R_L \leq (U_B - 9\ V)/0.02\ A\ [\Omega]$

Table 3: Environmental conditions

Features			Description
Sensor temperature range		Normal	-40 – 85 °C
media temperature range			-40 – 85 °C
Ambient temperature range			-40 – 85 °C
Compensated temperature range			0 – 80 °C
Transport / storage temperature range			-50 – 85 °C
EMC – Emission			EN 61000-6-3
EMC – Immunity			EN 61000-6-2
Insulation resistance			> 100 MΩ at 100 V
Mains frequency test			Based on SEN 361503
Vibration stability	Sinusoidal	15.9 mm-pp, 5 Hz-25 Hz	IEC 60068-2-6
		20 g, 25 Hz – 2 kHz	
	Random	7.5 grms , 5 Hz – 1 kHz	IEC 60068-2-64
Shock resistance	Shock	500 g / 1 ms	IEC 60068-2-27
	Free fall	1 m	IEC 60068-2-32
Enclosure			IP65

Table 4: Mechanical characteristics

Materials	Wetted parts	EN 10088-1; 1.4404 (AISI 316 L)
	Enclosure	EN 10088-1; 1.4404 (AISI 316 L)
	Electrical connections	Glass filled polyamid PA 6.6
Net weight		0.25 kg

© 2026 Miranda Water Technologies. All rights reserved.

D.4 Danfoss MBS 1700 / 1750 Page 4

Pressure transmitter, Type MBS 1700 and MBS 1750

Guideline for installations at high media temperature

Figure 2: installations at high media temperature

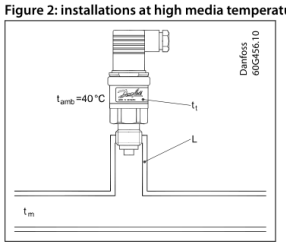

Table 5: Electrical connections

Medium temperature (tm) 120 °C	
Heat isolator (L)	Transmitter temperature (t^1)
2 cm	85 °C
5 cm	75 °C
10 cm	70 °C

Dimension

Figure 3: Dimension

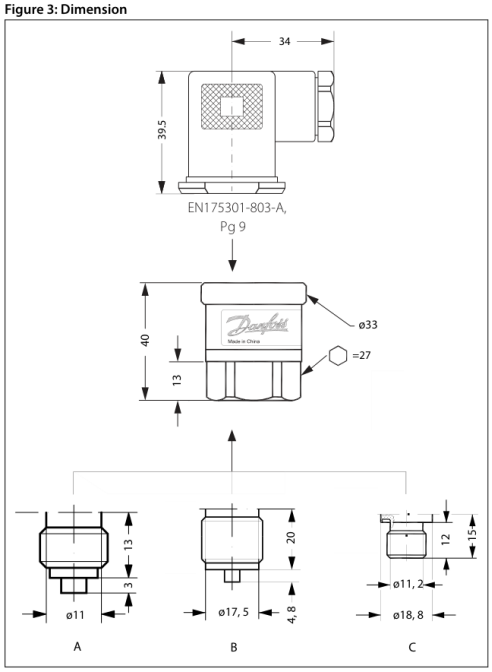

© Danfoss | Climate Solutions | 2021.02 AI309034611216en-000201 | 4

© 2026 Miranda Water Technologies. All rights reserved.

D.5 Danfoss MBS 1700 / 1750 Page 5

A	G ¼ A (EN 837)(MBS 1700)
B	G ½ A (EN 837)(MBS 1700)
C	G ¼ (DIN 3852-E) Gasket DIN 3869-14-NBR(MBS 1750)

Table 6: Torque Specification

Type code	MBS 1700	MBS 1750
Recommended torque[1]	30 – 35 Nm	30 – 35 Nm

[1] Depends on different parameters as packing material, mating material, thread lubrication and pressure level

Electrical connection

Figure 4: EN 175301-803-A,

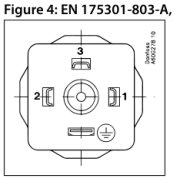

Table 7: Electrical connections

Type code	A1
Ambient temperature	-40 – 85 °C
Enclosure (IP protection fulfilled together with mating connector)	IP65
Material	Glass filled polyamid, PA 6.6
Electrical connection, 4 – 20 mA output (2 wire)	Pin 1: + supply Pin 2: ÷ supply Pin 3: Not used Earth: Connected to MBS enclosure

© 2026 Miranda Water Technologies. All rights reserved.

D.6 Danfoss MBS 1700 / 1750 Page 6

Pressure transmitter, Type MBS 1700 and MBS 1750

Ordering

Table 8: Plug; Pg 9 (EN 175301-803-A)

Measuring range P_e [1] [bar]	Output signal	Pressure connection	Code No.
0 – 6	4 – 20 mA	G ¼ A EN 837	060G6100
0 – 10			060G6101
0 – 16			060G6102
0 – 25			060G6103
0 – 6		G ½ A EN 837	060G6104
0 – 10			060G6105
0 – 16			060G6106
0 – 25			060G6107

[1] Relative / gauge

Table 9: Plug; Pg 9 (EN 175301-803-A)

Measuring range P_e [1] [bar]	Output signal	Pressure connection	Code No.
0 – 60	4 – 20 mA	DIN 3852-E G ¼ Gasket DIN 3869-14	060G6108
0 – 100			060G6112
0 – 160			060G6109
0 – 250			060G6110
0 – 400			060G6111

[1] Sealed gauge

© 2026 Miranda Water Technologies. All rights reserved.

D.7 Danfoss MBS 1700 / 1750 Page 7

Pressure transmitter, Type MBS 1700 and MBS 1750

Certificates, declarations and approvals

The list contains all certificates, declarations, and approvals for this product type. Individual code number may have some or all of these approvals, and certain local approvals may not appear on the list.

Some approvals may change over time. You can check the most current status at danfoss.com or contact your local Danfoss representative if you have any questions.

Table 10: Valid approvals

File name	Document type	Document topic	Approval authority
OC.C.30.004.A 59728-1	Measuring - Performance Certificate		GOST
060R9400.02	EU Declaration	EMCD/ROHS	Danfoss
060R3160.00	Manufacturers Declaration	China RoHS	Danfoss
064R9402.00	Manufacturers Declaration	PED	Danfoss
UL E494625	Electrical - Safety Certificate		UL

D.8 Danfoss MBS 1700 / 1750 Page 8

© 2026 Miranda Water Technologies. All rights reserved.

ENGINEERING TOMORROW

Online support

Danfoss offers a wide range of support along with our products, including digital product information, software, mobile apps, and expert guidance. See the possibilities below.

The Danfoss Product Store



The Danfoss Product Store is your one-stop shop for everything product related—no matter where you are in the world or what area of the cooling industry you work in. Get quick access to essential information like product specs, code numbers, technical documentation, certifications, accessories, and more.
Start browsing at store.danfoss.com.

Find technical documentation



Find the technical documentation you need to get your project up and running. Get direct access to our official collection of data sheets, certificates and declarations, manuals and guides, 3D models and drawings, case stories, brochures, and much more.

Start searching now at www.danfoss.com/en/service-and-support/documentation.

Danfoss Learning



Danfoss Learning is a free online learning platform. It features courses and materials specifically designed to help engineers, installers, service technicians, and wholesalers better understand the products, applications, industry topics, and trends that will help you do your job better.

Create your Danfoss Learning account for free at www.danfoss.com/en/service-and-support/learning.

Get local information and support



Local Danfoss websites are the main sources for help and information about our company and products. Find product availability, get the latest regional news, or connect with a nearby expert—all in your own language.

Find your local Danfoss website here: www.danfoss.com/en/choose-region.

Spare Parts



Get access to the Danfoss spare parts and service kit catalog right from your smartphone. The app contains a wide range of components for air conditioning and refrigeration applications, such as valves, strainers, pressure switches, and sensors.

Download the Spare Parts app for free at www.danfoss.com/en/service-and-support/downloads.

Danfoss can accept no responsibility for possible errors in catalogues, brochures and other printed material. Danfoss reserves the right to alter its products without notice. This also applies to products already on order provided that such alterations can be made without subsequential changes being necessary in specifications already agreed. All trademarks in this material are property of the respective companies. Danfoss and the Danfoss logotype are trademarks of Danfoss A/S. All rights reserved.

© Danfoss | Climate Solutions | 2021.02 AI309034611216en-000201 | 8

Appendix E - Process and UF Arrangement Figures

© 2026 Miranda Water Technologies. All rights reserved.

E.1 UF Process Design Summary

MIRANDA water technologies

akualys UF System

Page 1 / 2

Project Name	: mirand_aat	Comments	
Design Date / Proposal Number	: 4.09.2025 / 20250904_mirand_aat_EK_01_100mkupgun	20250904_mirand_aat_EK_01_100mkupgun	
Designer	: Erdi Koc - Sales Executive		
Company Name	: Akkim Kimya		

Feed Water Features

Feed Water Type	: **Treated Waste Water**	Module Type	: **Akualys-APM-80T**
Raw Water Turbidity (NTU)	: **10**	Total Membrane Area (m^2)	: **160**
Raw Water Total Suspended Solids (mg/l)	: **<10**	Number of Train	: **1**
Raw Water Total Organic Carbon (mg/l)	: **<10**	Operation Flux ($l/m^2/h$)	: **37,19**
Raw Water Hardness (mg/l CaCO3)	: **1**	Operation Efficiency (%)	: **83,20**
Raw Water Bicarbonate (HCO3; mg/l)	: **1**		
Raw Water Inlet Temperature	: **20 °C**		

AKUALYS PROCESS DESIGN

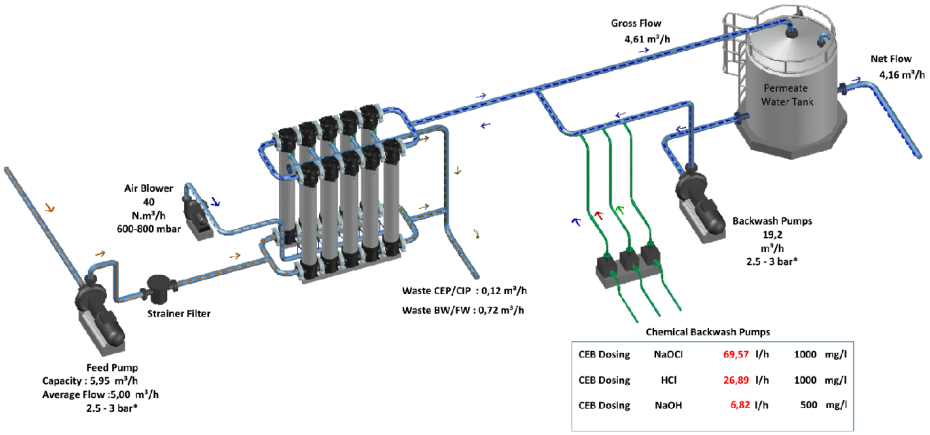

CEB Dosing	NaOCl	69,57 l/h	1000	mg/l
CEB Dosing	HCl	26,89 l/h	1000	mg/l
CEB Dosing	NaOH	6,82 l/h	500	mg/l

Project produced by Akualys v3.0
Licenced

E.2 Sand Filter Arrangement and Valve Table

© 2026 Miranda Water Technologies. All rights reserved.

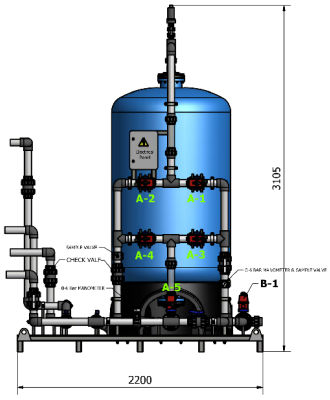

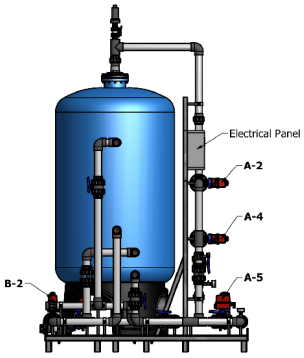

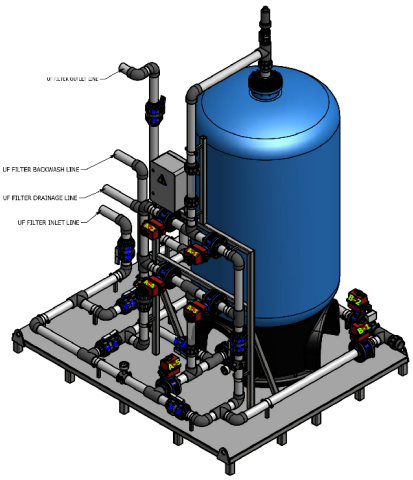

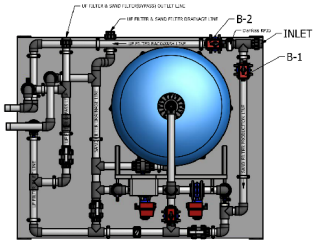

TABLE	
EQUIPMENT VALVES	LOCATION
P-1	TREATED WATER TANK VALVE
P-2	FILTERED WATER TANK VALVE
B-1	SAND FILTER INLET VALVE
B-2	UF FILTER BACKWASH VALVE
A-1	SAND FILTER VALVES
A-2	SAND FILTER VALVES
A-3	SAND FILTER VALVES
A-4	SAND FILTER VALVES
A-5	SAND FILTER VALVES
V-1	MANUAL VALVE
V-2	MANUAL VALVE
V-3	MANUAL VALVE
V-4	MANUAL VALVE
V-5	MANUAL VALVE
V-6	MANUAL VALVE
V-7	MANUAL VALVE
Feed Pump	TREATED WATER TANK
Backwash Pump	FILTERED WATER TANK

SAND FILTER OPERATION SCENARIO SCHEDULE									
SAND FILTER OPERA									
EQUIPMENT VALVES & PUMPS	SAND FILTER PRODUCTION	SAND FILTER BACKWASH	SAND FILTER RINSE	UF BACKWASH	UF BYPASS SAND FILTER PRODUCTION	UF PRODUCTION SAND FILTER BYPASS	UF + SAND FILTER BYPASS (DISCHARGE)	INLET BYPASS TO DRAINAGE LINE (SLUDGE TANK)	SAND FILTER EMPTYING
P-1	OPEN	CLOSED	CLOSED	CLOSED	OPEN	OPEN	OPEN	OPEN	CLOSED
P-2	CLOSED	OPEN	OPEN	OPEN	CLOSED	CLOSED	CLOSED	CLOSED	CLOSED
B-1	OPEN	OPEN	OPEN	CLOSED	OPEN	OPEN	OPEN	OPEN	CLOSED
B-2	CLOSED	CLOSED	CLOSED	OPEN	CLOSED	CLOSED	CLOSED	CLOSED	CLOSED
A-1	OPEN	CLOSED	OPEN	CLOSED	OPEN	CLOSED	CLOSED	CLOSED	CLOSED
A-2	CLOSED	OPEN	CLOSED	CLOSED	CLOSED	CLOSED	CLOSED	CLOSED	CLOSED
A-3	CLOSED	OPEN	CLOSED	CLOSED	CLOSED	CLOSED	CLOSED	CLOSED	CLOSED
A-4	CLOSED	CLOSED	OPEN	CLOSED	CLOSED	CLOSED	CLOSED	CLOSED	CLOSED
A-5	OPEN	OPEN	CLOSED	CLOSED	OPEN	CLOSED	CLOSED	CLOSED	CLOSED
V-1	OPEN	OPEN	OPEN	OPEN	OPEN	CLOSED	CLOSED	CLOSED	CLOSED
V-2	CLOSED	CLOSED	CLOSED	CLOSED	CLOSED	OPEN	OPEN	OPEN	CLOSED
V-3	CLOSED	CLOSED	CLOSED	CLOSED	CLOSED	CLOSED	CLOSED	CLOSED	OPEN
V-4	CLOSED	CLOSED	CLOSED	CLOSED	CLOSED	CLOSED	CLOSED	OPEN	CLOSED
V-5	CLOSED	CLOSED	CLOSED	CLOSED	OPEN	CLOSED	OPEN	CLOSED	CLOSED
V-6	OPEN	OPEN	OPEN	OPEN	CLOSED	OPEN	CLOSED	CLOSED	CLOSED
V-7	OPEN	OPEN	OPEN	OPEN	CLOSED	OPEN	CLOSED	CLOSED	CLOSED
Feed Pump	RUN	CLOSED	CLOSED	CLOSED	RUN	RUN	RUN	RUN	CLOSED
Backwash Pump	CLOSED	RUN	RUN	RUN	CLOSED	CLOSED	CLOSED	CLOSED	CLOSED

E.3 SAND + UF Assembly View 1

© 2026 Miranda Water Technologies. All rights reserved.

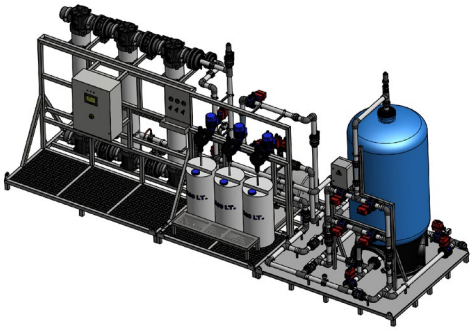

E.4 SAND + UF Assembly View 2

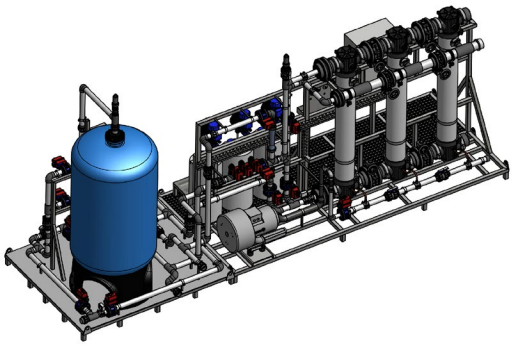

E.5 Project P&I; Diagram

© 2026 Miranda Water Technologies. All rights reserved.

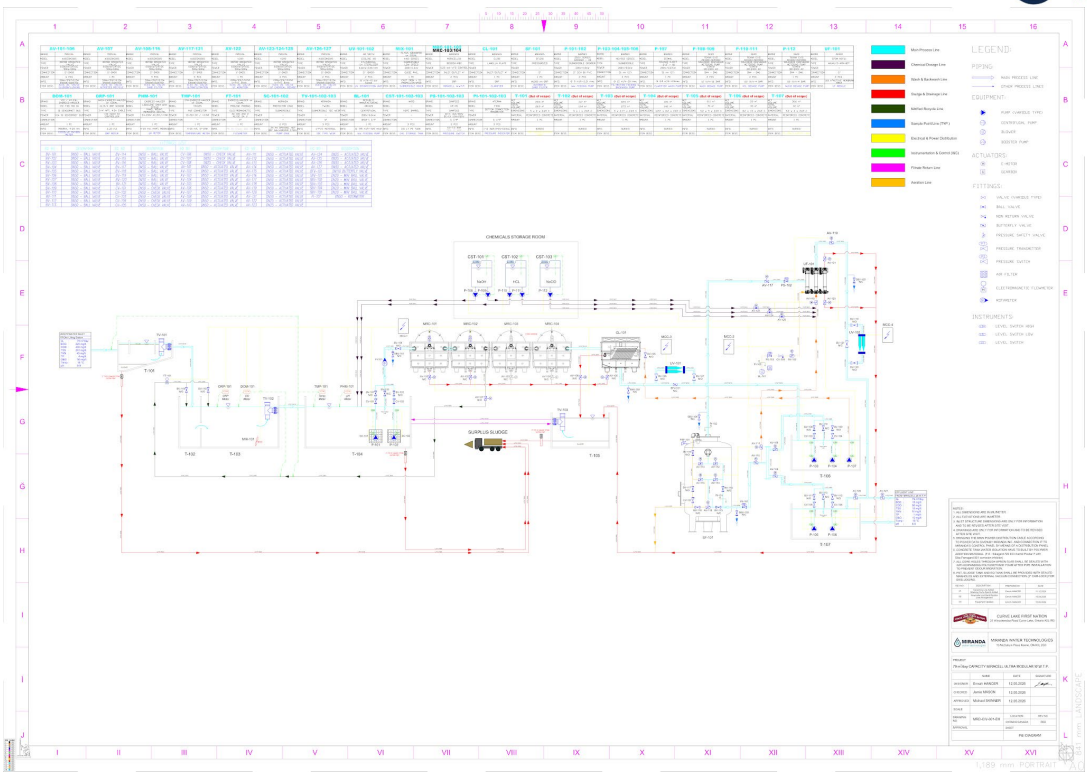

Appendix F - Electrical Diagrams

F.1 Purpose

This appendix contains a place holder to be updated with the electrical drawings and control schematics for the SmartCell™ wastewater treatment system. These drawings document the facility's electrical distribution, control architecture, instrumentation interfaces, communications network, and process control philosophy.

The diagrams included in this appendix are project-specific and reflect the final installed equipment, electrical service, instrumentation, PLC programming, and panel configurations for the facility. These drawings should be used in conjunction with the Process Design Report (PDR), electrical specifications, equipment data sheets, and the Operations and Maintenance Manual during operation, maintenance, troubleshooting, and future modifications.

F.2 Building Electrical Service and Distribution

This section includes the building electrical distribution drawings, including:

© 2026 Miranda Water Technologies. All rights reserved.

- Incoming electrical service
- Main service disconnect
- Main distribution panel
- Panel schedules
- Branch circuit distribution
- Equipment feeders
- Grounding and bonding
- Standby generator connection (where applicable)
- Automatic Transfer Switch (ATS), where provided

Insert Project-Specific SmartCell™ Electrical Schematic

F.3 SmartCell™ Main Control Panel

This section contains the electrical schematics, wiring diagrams, and control architecture for the SmartCell™ Main Control Panel, including:

- *Main disconnect*
- *PLC controller*
- *Human Machine Interface (HMI)*
- *Power supplies*
- *Input/Output (I/O) modules*
- *Network communications*
- *Expansion I/O*
- *Variable Frequency Drives (VFDs) for Equalization Pumps*
- *Motor protection devices*
- *Emergency stop circuits*
- *Control power distribution*
- *Alarm and communications interfaces*

Insert Project-Specific SmartCell™ Electrical Schematic

F.4 MIRACELL® Process Control Panel

This section contains the electrical schematics and control documentation for the MIRACELL® biological treatment process, including:

- *Variable Frequency Drives (VFDs) for each MIRACELL® module*
- *Extension I/O modules*
- *Automated process valves*
- *Wash pump controls*
- *Motor protection*

© 2026 Miranda Water Technologies. All rights reserved.

- *MIRACELL® lockout and isolation circuitry*
- *Emergency stop circuits*
- *Local operator controls*
- *Field instrumentation interfaces*

Insert Project-Specific SmartCell™ Electrical Schematic

F.5 Sand Filter and Ultra Filtration (UF) Control Panel

This section contains the electrical and control documentation for the tertiary treatment system, including:

- *Feed pumps (Duty/Standby)*
- *Backwash pumps (Duty/Standby)*
- *Variable Frequency Drives (VFDs)*
- *Air blower controls*
- *Automated valves*
- *Pressure transmitters*
- *Flow instrumentation*
- *Expansion I/O modules*
- *Backwash sequencing controls*
- *Safety interlocks*
- *Panel wiring diagrams*

Insert Project-Specific SmartCell™ Electrical Schematic

F.6 UV Disinfection Control Panel(s)

This section contains the electrical and control documentation supplied for the UV disinfection system(s), including:

- *Electrical schematics*
- *Control panel layout*
- *Alarm and warning descriptions*
- *Status indicators*
- *Lamp monitoring*
- *Ballast information*
- *Safety interlocks*
- *Communication interfaces*
- *Recommended maintenance information*

Where multiple UV systems are installed, documentation for each unit is included.

© 2026 Miranda Water Technologies. All rights reserved.

Insert Project-Specific SmartCell™ Electrical Schematic

F.7 SmartCell™ Network and Communications Architecture

This section contains the communications architecture for the SmartCell™ control platform, including:

- *PLC network topology*
- *HMI communications*
- *Ethernet switches*
- *Fibre optic communications (where applicable)*
- *Remote access configuration*
- *SCADA integration*
- *Industrial communication protocols (Modbus TCP/IP, Ethernet/IP, or project-specific protocols)*
- *Third-party equipment interfaces*
- *Network security architecture, where applicable*

Insert Project-Specific SmartCell™ Electrical Schematic

© 2026 Miranda Water Technologies. All rights reserved.

Appendix G – SmartCell™ Process Automation and Alarm Philosophy

G.1 Purpose

The SmartCell™ Process Automation and Monitoring System provides centralized monitoring, automatic process control, alarm management, historical data logging, and remote communications for the MIRACELL® Wastewater Treatment System.

The purpose of SmartCell™ is to improve treatment reliability, optimize process performance, reduce operator workload, and provide early notification of abnormal operating conditions before treatment performance is affected.

SmartCell™ continuously monitors the wastewater treatment process and automatically controls equipment based on predefined operating sequences and process conditions. Although SmartCell™ automates many routine operating functions, it is intended to support—not replace—the plant operator. Routine inspections, preventive maintenance, laboratory testing, and operator judgment remain essential for the safe and reliable operation of the treatment facility.

G.2 SmartCell™ Operating Philosophy

The SmartCell™ Process Automation and Monitoring System has been designed around five primary operating principles:

Continuous Monitoring

Critical process equipment and instrumentation are continuously monitored to provide real-time information regarding system performance.

Automatic Process Control

Equipment is automatically sequenced and operated based upon process demand, equipment status, and programmed operating logic.

Alarm Management

Operators are immediately notified whenever operating conditions exceed established limits or equipment faults occur.

Historical Trending

© 2026 Miranda Water Technologies. All rights reserved.

Process data is continuously recorded to support troubleshooting, process optimization, predictive maintenance, and regulatory reporting.

Operator Assistance

SmartCell™ provides operators with the information necessary to make informed operating decisions while reducing routine manual intervention.

G.3 Equipment Monitored and Controlled by SmartCell™

Depending on the project configuration, SmartCell™ monitors and controls the wastewater treatment process, including:

Process Equipment

- Equalization Tank Pumps
- MIRACELL® Drive Motors
- Denitrification Mixer (where installed)
- Sand Filter Feed Pumps
- Ultrafiltration Feed Pumps
- Ultrafiltration Backwash Pumps
- Clarifier Wash Pump
- Sludge Transfer Pumps (where installed)
- Waste Sludge Pumps (where installed)
- Chemical Dosing Pumps
- UV Disinfection System
- Actuated Process Valves

Process Instrumentation

- Tank Level Sensors
- Pump Status
- Motor Current
- Variable Frequency Drive (VFD) Status
- Pressure Indicators (PI)
- Pressure Switches (PS)
- Pressure Transmitters (PT/PIT)
- Differential Pressure Sensors
- Ultrafiltration Transmembrane Pressure (TMP)
- Flow Meters (where installed)
- Temperature Sensors
- pH Sensors (where installed)

© 2026 Miranda Water Technologies. All rights reserved.

- ORP Sensors (where

G.4 Automatic Operating Philosophy

The SmartCell™ Process Automation and Monitoring System has been designed to automate routine wastewater treatment operations while maintaining stable hydraulic conditions, protecting critical equipment, and optimizing biological treatment performance. The control philosophy emphasizes continuous process operation, equipment protection, energy efficiency, and operator awareness.

Under normal operating conditions, the treatment system operates in **Automatic Mode**, where SmartCell™ continuously evaluates process conditions and automatically starts, stops, or sequences equipment based on programmed operating logic and real-time instrumentation.

Automatic process control functions may include:

- Equalization Tank level control.
- Duty/standby pump alternation.
- Lead/lag pump sequencing.
- MIRACELL® drive operation.
- Denitrification mixer operation, where installed.
- Sand Filter feed control.
- Sand Filter backwash sequencing.
- Ultrafiltration feed control.
- Ultrafiltration backwash sequencing.
- Ultrafiltration air scour sequencing.
- Chemical dosing pump operation.
- UV system monitoring and interlocks.
- Actuated process valve sequencing.
- Alarm generation.
- Runtime accumulation.
- Equipment fault logging.
- Historical trend recording.
- Remote monitoring and diagnostics, where enabled.

SmartCell™ is intended to reduce unnecessary manual operation while ensuring that critical process equipment operates only when required. This reduces equipment wear, minimizes unnecessary energy consumption, and helps maintain stable treatment performance.

Equipment operating in Automatic Mode should not be placed in Manual Mode except for commissioning, testing, troubleshooting, or maintenance by authorized personnel. Following any manual operation, equipment should be returned to Automatic Mode once the activity is complete and the system is safe to resume normal operation.

© 2026 Miranda Water Technologies. All rights reserved.

SmartCell™ does not eliminate the need for operator inspection. Operators shall continue to perform routine field checks, verify equipment operation, review alarms, and compare SmartCell™ readings with observed field conditions.

Appendix H – Emergency Response Procedures

H.1 Purpose

This appendix provides general guidance for responding to emergency conditions that may affect the safe operation of the MIRACELL® Wastewater Treatment System. The procedures are intended to assist operators in protecting personnel, equipment, the environment, and regulatory compliance until the situation has been stabilized.

These procedures supplement, but do not replace, the Owner's Emergency Response Plan, Occupational Health and Safety Program, or applicable federal, provincial, and municipal regulations. Site-specific emergency procedures shall always take precedence.

The safety of personnel shall always be the highest priority.

H.2 Emergency Response Priorities

During any emergency, operators should respond in the following order:

1. Protect personnel and public safety.
2. Eliminate immediate hazards where it is safe to do so.
3. Protect the environment and prevent unauthorized wastewater discharge.
4. Protect process equipment from damage.
5. Restore wastewater treatment operations.
6. Document the incident and notify the appropriate personnel.

Operators shall never place themselves at risk in an attempt to protect equipment or property.

H.3 Emergency Contact Information

The Owner should complete and maintain a current emergency contact list that includes:

Name	Phone Number
Chief Waste Water Plant Operator	

© 2026 Miranda Water Technologies. All rights reserved.

Name	Phone Number
Maintenance Supervisor	
Miranda Water Technologies Technical Support	+705-241-5500
Electrical Contractor	
Mechanical Contractor	
Chemical Supplier	
Utility Company	
Fire Department	
Emergency Medical Services	
Environmental Regulatory Authority (if applicable)	
Spill Reporting Agency (where applicable)	

This contact list should be posted adjacent to the SmartCell™ and at the main entrance door.

H.4 General Emergency Response Procedure

When an emergency occurs:

1. Remain calm and assess the situation
2. Protect personnel from immediate hazards
3. Activate the Emergency Stop (E-Stop) on the SmartCell™ or by the Exit (if equipped) if continued equipment operation presents an immediate danger to personnel or equipment
4. Notify supervisory personnel as required
5. Review SmartCell™ alarms and operating status
6. Determine the cause of the emergency
7. Isolate affected equipment if necessary
8. Restore normal operation when safe
9. Record all observations, alarms, corrective actions, and equipment status in the operating log

H.5 Utility Power Failure

Immediate Actions

- Confirm loss of incoming utility power
- Verify SmartCell™ shutdown sequence

© 2026 Miranda Water Technologies. All rights reserved.

- Confirm standby generator operation (if installed)
- Verify Automatic Transfer Switch (ATS) operation
- Confirm critical process equipment has restarted

If No Generator Is Available

- Secure the facility
- Minimize unnecessary wastewater inflow where possible
- Monitor Equalization Tank levels
- Restore power as soon as practical

Refer to **Section 2.13 – Emergency Power Failure and Process Recovery** for guidance on biological process recovery.

H.6 Pump Failure

If a process pump fails:

- Review SmartCell™ alarm history
- Verify the fault indication
- Determine whether the standby pump has automatically started
- Inspect the failed pump for leaks, abnormal noise, overheating, or electrical faults
- Isolate the failed pump if required
- Notify maintenance personnel if repairs are necessary

Do not repeatedly reset motor overloads without determining the cause of the failure

H.7 High Tank Level or Overflow Risk

If SmartCell™ indicates a High or High-High tank level (optional feature):

- Verify level using field observation
- Confirm pump operation
- Inspect for blocked piping or closed valves
- Confirm downstream equipment is operating correctly
- Reduce influent flow where practical
- Monitor for potential overflow conditions

Any wastewater overflow shall be reported in accordance with applicable regulatory requirements.

H.8 Chemical Spill or Leak

© 2026 Miranda Water Technologies. All rights reserved.

Chemical systems may include sodium hypochlorite, citric acid, sodium hydroxide, or other treatment chemicals depending upon project configuration.

If a chemical spill occurs:

- Wear appropriate PPE
- Prevent unauthorized access
- Stop the source of the leak if it is safe to do so
- Contain the spill using approved spill response materials
- Prevent chemicals from entering storm drains or watercourses
- Follow the Safety Data Sheet (SDS) for the affected chemical
- Notify supervisory personnel

Dispose of spilled materials in accordance with applicable environmental regulations.

H.9 UV System Failure

If the UV system alarms or shuts down:

- Verify lamp operation
- Inspect quartz sleeves
- Confirm power supply
- Review SmartCell™ alarms
- Confirm upstream filtration performance
- Restore UV operation before discharging treated effluent where required by permit

If disinfection cannot be restored, follow the Owner's contingency procedures and regulatory notification requirements.

H.10 Ultrafiltration System Failure (MIRACELL® Ultra)

If the Ultrafiltration System experiences abnormal operation:

- Review SmartCell™ alarms
- Verify Transmembrane Pressure (TMP)
- Confirm feed pump operation
- Verify backwash sequence
- Inspect air scour blower operation
- Perform chemical cleaning if required
- Contact Miranda Water Technologies if abnormal membrane conditions persist

Do not continue operating severely fouled membranes without corrective action.

© 2026 Miranda Water Technologies. All rights reserved.

H.11 MIRACELL® Drive Failure

If an RBC drive motor stops unexpectedly:

- Verify electrical supply
- Review SmartCell™ alarms
- Inspect VFD status
- Verify gearbox operation
- Confirm the shaft rotates freely
- Remove the unit from service if mechanical damage is suspected

Extended periods without disc rotation may affect biological treatment performance.

Refer to **Section 2.13 – Emergency Power Failure and Process Recovery** for expected biological recovery periods.

H.12 Fire

In the event of fire:

- Activate emergency procedures
- Evacuate personnel
- Contact the Fire Department
- Isolate electrical power if safe
- Use only approved fire extinguishers
- Do not enter smoke-filled areas
- Follow site emergency procedures

Personnel safety shall always take priority over equipment protection.

H.13 Flooding

If flooding occurs:

- Disconnect electrical equipment if safe
- Prevent personnel from entering flooded electrical areas
- Protect chemical storage where practical
- Monitor tank stability
- Inspect equipment after floodwaters recede
- Do not restart electrical equipment until inspected by qualified personnel

© 2026 Miranda Water Technologies. All rights reserved.

H.14 Equipment Lock-Out / Tag-Out

Before performing maintenance:

- The MIRACELL® equipment is equipped with a Lock Out switch, please follow the Lock-Out / Tag-Out (LOTO) procedures. Which includes
    - Verify the Emergency Stop is selected and the lockout is ready
    - Verify complete electrical isolation
    - Release stored energy
    - Confirm rotating equipment has stopped
    - Verify safe working conditions before beginning maintenance

Refer to **Section 10 – Safety Procedures** for detailed LOTO requirements.

H.15 Alarm Response Philosophy

An alarm identifies a condition requiring operator attention.

Operators should:

- Acknowledge the alarm
- Determine the cause
- Verify field conditions
- Correct the underlying problem
- Return equipment to Automatic Mode
- Record corrective actions

Repeatedly acknowledging alarms without investigation is not an acceptable operating practice.

H.16 Incident Reporting

Following any emergency, operators should record:

- Date and time
- Equipment involved
- SmartCell™ alarms
- Process conditions
- Laboratory results (if applicable)
- Cause of the incident
- Corrective actions taken
- Equipment repaired or replaced

© 2026 Miranda Water Technologies. All rights reserved.

- Notifications made
- Recommendations to prevent recurrence

Incident reports should be retained in accordance with the Owner's record retention policy.

H.17 Post-Emergency Recovery

Following any emergency:

- Verify all treatment processes are operating normally
- Review SmartCell™ trends
- Inspect all equipment involved
- Perform laboratory sampling where appropriate
- Monitor treatment performance closely until stable conditions are restored
- Update operating logs and maintenance records

Biological treatment systems may require time to recover following significant process interruptions. Operators should avoid unnecessary process adjustments during the recovery period and allow the biological process to re-establish equilibrium under stable operating conditions.

H.18 Operator Best Practices

Successful emergency response depends on preparation rather than reaction.

Operators should:

- Know the location of all emergency stops, disconnects, and isolation valves
- Understand the operation of standby equipment
- Review SmartCell™ alarms promptly
- Participate in emergency response training
- Maintain current emergency contact information
- Keep spill response materials readily available
- Practice routine emergency drills
- Record factual observations during every incident

Prepared operators respond more effectively, minimize equipment damage, reduce downtime, and help maintain regulatory compliance.

Appendix I – Biological Process Reference Guide

Purpose

© 2026 Miranda Water Technologies. All rights reserved.

This appendix provides a practical overview of the biological treatment processes used within the Miranda Water Technologies MIRACELL® Rotating Biological Contactor (RBC) Wastewater Treatment System. It is intended to help operators, owners, regulators, and maintenance personnel understand how wastewater is biologically treated and the operating conditions required to maintain consistent treatment performance.

Unlike activated sludge systems, the MIRACELL® process relies on a fixed-film microbial ecosystem that naturally develops on the surface of rotating biological media. These microorganisms continuously remove pollutants as wastewater flows through the treatment train.

I.1 Biological Treatment Overview

Domestic wastewater contains organic matter, suspended solids, nutrients, microorganisms, oils, greases, and dissolved compounds. The purpose of biological treatment is to convert these contaminants into stable end products using naturally occurring bacteria and other microorganisms.

Within the MIRACELL® system, microorganisms perform four primary functions:

- Removal of organic matter (BOD)
- Conversion of ammonia to nitrate (Nitrification)
- Optional conversion of nitrate to nitrogen gas (Denhitrification)
- Biological stabilization of sludge

The process continuously reproduces healthy microbial populations that naturally adjust to changing wastewater characteristics.

I.2 The Fixed-Film Process

The MIRACELL® system uses a Rotating Biological Contactor (RBC).

Thousands of engineered media discs rotate slowly through wastewater while simultaneously being exposed to atmospheric oxygen.

This provides microorganisms with:

- Food (organic pollutants)
- Oxygen
- Moisture
- Surface area for attachment

Instead of remaining suspended in water-like activated sludge systems, microorganisms remain attached to the rotating media where they form a stable biological film known as biofilm.

© 2026 Miranda Water Technologies. All rights reserved.

As the discs rotate:

1. Biofilm contacts wastewater
2. Organics are absorbed
3. Oxygen is replenished
4. Microorganisms metabolize pollutants
5. Excess biomass naturally sloughs off
6. Solids settle in the clarifier

I.3 Biofilm Development

The biofilm continuously grows and renews itself.

Typical development stages include:

Stage 1 – Initial Attachment

Naturally occurring bacteria attach to clean media surfaces.

Stage 2 – Growth

Microorganisms multiply rapidly as food becomes available.

Stage 3 – Mature Biofilm

A stable microbial community develops consisting of:

- Heterotrophic bacteria
- Nitrifying bacteria
- Protozoa
- Rotifers
- Other beneficial microorganisms

This mature biofilm provides the highest treatment efficiency.

Stage 4 – Sloughing

As biofilm becomes thicker, oxygen penetration decreases.

Older biomass naturally detaches and is removed in the secondary clarifier.

New biofilm immediately begins replacing detached material.

This natural cycle is essential for healthy system operation.

© 2026 Miranda Water Technologies. All rights reserved.

I.4 Removal of Organic Matter (BOD)

Biochemical Oxygen Demand (BOD) represents biodegradable organic pollution.

Examples include:

- Human waste
- Food waste
- Soaps
- Detergents
- Paper fibers
- Organic debris

Heterotrophic bacteria consume these compounds and convert them into:

- Carbon dioxide
- Water
- New bacterial cells
- Heat

This process significantly reduces the oxygen demand that wastewater would otherwise place on receiving rivers, lakes, or groundwater.

I.5 Nitrification

Following removal of carbonaceous material, specialized bacteria convert ammonia into nitrate.

This occurs in two biological stages.

Step 1

Ammonia → Nitrite

Performed primarily by ammonia-oxidizing bacteria.

Step 2

Nitrite → Nitrate

Performed by nitrite-oxidizing bacteria.

Successful nitrification requires:

- Adequate dissolved oxygen

© 2026 Miranda Water Technologies. All rights reserved.

- Stable temperatures
- Healthy biofilm
- Sufficient biological contact time
- Appropriate pH

Nitrification is generally one of the slowest biological processes and is most affected by cold temperatures.

I.6 Optional Denitrification

Where total nitrogen removal is required, nitrate can be converted into harmless nitrogen gas.

This occurs within a separate anoxic denitrification tank.

Requirements include:

- Very low dissolved oxygen
- Carbon source
- Mixing
- Active denitrifying bacteria

The final product is nitrogen gas which naturally escapes into the atmosphere.

I.7 Biological Oxygen Demand vs Chemical Oxygen Demand

Parameter	Biological Oxygen Demand (BOD)	Chemical Oxygen Demand (COD)
Measures	Biodegradable organics	Total oxidizable organics
Biological Removal	Yes	Partial
Typical Domestic Ratio	COD approximately 1.8–2.5 × BOD	—

Higher COD relative to BOD may indicate industrial waste or slowly biodegradable compounds.

© 2026 Miranda Water Technologies. All rights reserved.

I.8 Sludge Production

Biological treatment produces excess microorganisms known as biological sludge.

Within the MIRACELL® process:

- Old biofilm detaches naturally
- Biomass settles in the clarifier
- Sludge is periodically removed
- Remaining microorganisms continue treatment

Because the biomass remains attached to the media, RBC systems generally produce **less waste sludge** than activated sludge plants treating the same flow.

I.9 Temperature Effects

Temperature significantly influences microbial activity.

Wastewater Temperature	Expected Biological Activity
>25°C	Excellent
20–25°C	Very Good
15–20°C	Good
14°C	Beginning of noticeable reduction in nitrification
10–14°C	Reduced nitrification
<10°C	Significantly slower biological activity

The Miracell® process is designed to continue operating under cold Canadian conditions; however, lower temperatures reduce biological reaction rates. As a result, cold-climate designs often incorporate increased biological contact time or additional treatment capacity to maintain performance.

I.10 pH Effects

Healthy biological treatment generally occurs within:

© 2026 Miranda Water Technologies. All rights reserved.

Preferred Range:

pH 6.8–8.2

Outside this range:

- bacterial activity decreases,
- nitrification slows,
- biological stress increases.

I.11 Dissolved Oxygen

The RBC naturally transfers oxygen from the atmosphere.

Typical operating targets:

Process	Dissolved Oxygen
Carbon Removal	>2 mg/L
Nitrification	>2 mg/L
Denitrification	<0.5 mg/L

I.12 Hydraulic Loading

The biological process depends upon maintaining design flow rates.

Excessive flow may:

- Reduce contact time
- Wash solids through clarifiers
- Reduce treatment efficiency

Insufficient flow may:

- Starve microorganisms
- Reduce biofilm activity

Equalization tanks are commonly used to maintain stable loading conditions.

© 2026 Miranda Water Technologies. All rights reserved.

I.13 Organic Loading

Microorganisms require a balanced food supply.

Excessive loading can result in:

- Thick biofilm
- Increased sloughing
- High effluent solids
- Reduced nitrification

Insufficient loading may lead to:

- Thin biofilm
- Reduced treatment efficiency
- Declining bacterial populations

I.14 Toxic Compounds

The biological process may be damaged by:

- Chlorine
- Solvents
- Petroleum products
- Paints
- Pesticides
- Strong acids
- Strong alkalis
- Heavy metals
- Large quantities of disinfectants

Industrial discharges should always be evaluated before entering the treatment system.

I.15 Common Microorganisms Found in Healthy Biofilm

Organism	Primary Function
Heterotrophic Bacteria	Remove organic matter
Nitrifying Bacteria	Convert ammonia to nitrate
Protozoa	Consume dispersed bacteria and improve effluent clarity

© 2026 Miranda Water Technologies. All rights reserved.

Rotifers	Consume fine particles and assist polishing
Fungi	Assist breakdown of complex organics (limited quantities)

A diverse microbial population generally indicates a healthy and stable treatment process.

I.16 Process Monitoring Indicators

Routine monitoring typically includes:

- Influent flow
- Effluent flow
- BOD
- COD
- Total Suspended Solids (TSS)
- Ammonia
- Nitrate
- Total Nitrogen (where applicable)
- pH
- Dissolved Oxygen
- Temperature
- Sludge depth
- Visual biofilm condition

These parameters provide valuable insight into overall biological performance and help identify operational trends before treatment efficiency is affected.

I.17 Advantages of the MIRACELL® RBC Biological Process

Compared with conventional activated sludge systems, the MIRACELL® process offers several operational advantages:

- Stable fixed-film microbial population.
- Lower energy consumption due to passive oxygen transfer.
- Reduced operator intervention.
- Lower sludge production.
- High process stability under variable hydraulic loading.
- Good resilience to shock organic loading.
- Simplified mechanical operation with fewer process control adjustments.
- Modular design that can be expanded as treatment demand increases.

© 2026 Miranda Water Technologies. All rights reserved.

- Proven long-term performance in decentralized and community-scale wastewater treatment applications.

In summary the MIRACELL® biological treatment process uses naturally occurring microorganisms attached to rotating biological media to remove organic pollutants, convert ammonia to nitrate, and produce a high-quality treated effluent. By maintaining appropriate hydraulic loading, oxygen transfer, temperature, pH, and routine monitoring, the system provides reliable and energy-efficient wastewater treatment with relatively low maintenance requirements. Understanding the biological principles described in this appendix enables operators and owners to better interpret process performance, diagnose operational changes, and support the long-term health of the treatment system.

Appendix J - Index

A

- **Alarm Philosophy**: 11, G.4
- **Alum (Aluminum Sulfate)**: 2.7, A.13
- **Ammonia Removal**: 3.2.16, 5.2.2
- **Antiscalant**: 2.7
- **Automatic Operating Philosophy**: 6, G.4

B

- **Biological Hazards**: 2.4
- **Biological Process (General)**: 3.2.1, 5.2, Appendix I
- **Biological Recovery (Post-Shutdown)**: 5.4.7
- **Biological Sloughing**: 5.2.3, 3.2.16.6
- **Blowers (BL-101)**: 7, Appendix C
- **BOD**□ 1.1, 1.2.2, 5.2.3

C

- **Caustic Soda (Sodium Hydroxide)**: 2.7
- **Chemical Compatibility**: 2.7.2
- **Chemical Handling**: 2.7.1
- **Chemical Safety**: 2.7
- **Clarifier (Lamella)**: 3.2.6, 5.2.4
- **Cold Weather Operation**: 3.2.15
- **Commissioning**: 13
- **Confined Space**: 2.10

H

- **Hydraulic Control Philosophy**: 3.3.3
- **Hydraulic Flow Path**: 3.3.2
- **Hydraulic Profile**: 3.3, 3.3.10
- **Hydrochloric Acid:** 2.7

L

- **Lockout / Tagout (LOTO)**: 2.9, H.14

M

- **Maintenance (Preventive)**: 9
- MIRACELL® RBC Modules: 3.2.5, 5.1
- **Operator Logs and Inspection Forms**: 10, 19

P

- **Personal Protective Equipment (PPE)**: 2.3
- **Pressure Instrumentation**: 8, 17, Appendix D
- **Primary Settling Tank (PST)**: 3.2.2
- **Process Narrative**: 3.2
- **Pump Curves**: Appendix B
- **Pumps (P-101 to P-107)**: 6, 14, 15

S

- **Safety Data Sheets (SDS)**: 2.7.5
- **Seasonal Loading**: 3.2.16
- **Sludge Handling**: 3.2.13, 3.4

© 2026 Miranda Water Technologies. All rights reserved.

D

- **Denitrification**: 1.2.2, 3.2.3
- **Disinfection (UV)**: 3.2.7, 3.2.11, 5.2.7

E

- **Electrical Diagrams**: Appendix F
- **Electrical Safety**: 2.6
- **Emergency Power Failure**: 2.13, H.5
- **Emergency Response Procedures**: 2.8, Appendix H
- **Equalization Tank (EQ)**: 3.2.4
- **Equipment Clearances**: 3.6
- **Equipment Data Sheets**: Appendix A

F

- **Filtration (Sand)**: 3.2.9, 5.2.5
- **Frequently Asked Questions (FAQ)**: 21
- **SmartCell ™ System**: 3.2.14, G.2
- **Sodium Hypochlorite**: 2.7
- **Sodium Metabisulfite (SMBS)**: 2.7
- **Spare Parts**: 12

T

- **Tank Sizes**: 3.5
- **Troubleshooting**: 11, 6.3

U

- **Ultrafiltration (UF)**: 3.2.10, 5.2.6, 16
- **UV Disinfection**: 3.2.7, 3.2.11, 5.2.7

W

- **Waste Management**: 3.4
- **Waste Minimization**: 3.4.9

© 2026 Miranda Water Technologies. All rights reserved.