**Building & Septic Division**
180 Kent Street West, Lindsay ON, K9V 2Y6
P: 705-324-9411 ext. 1288
E: buildingpermits@kawarthalakes.ca

# Deck Construction Guide

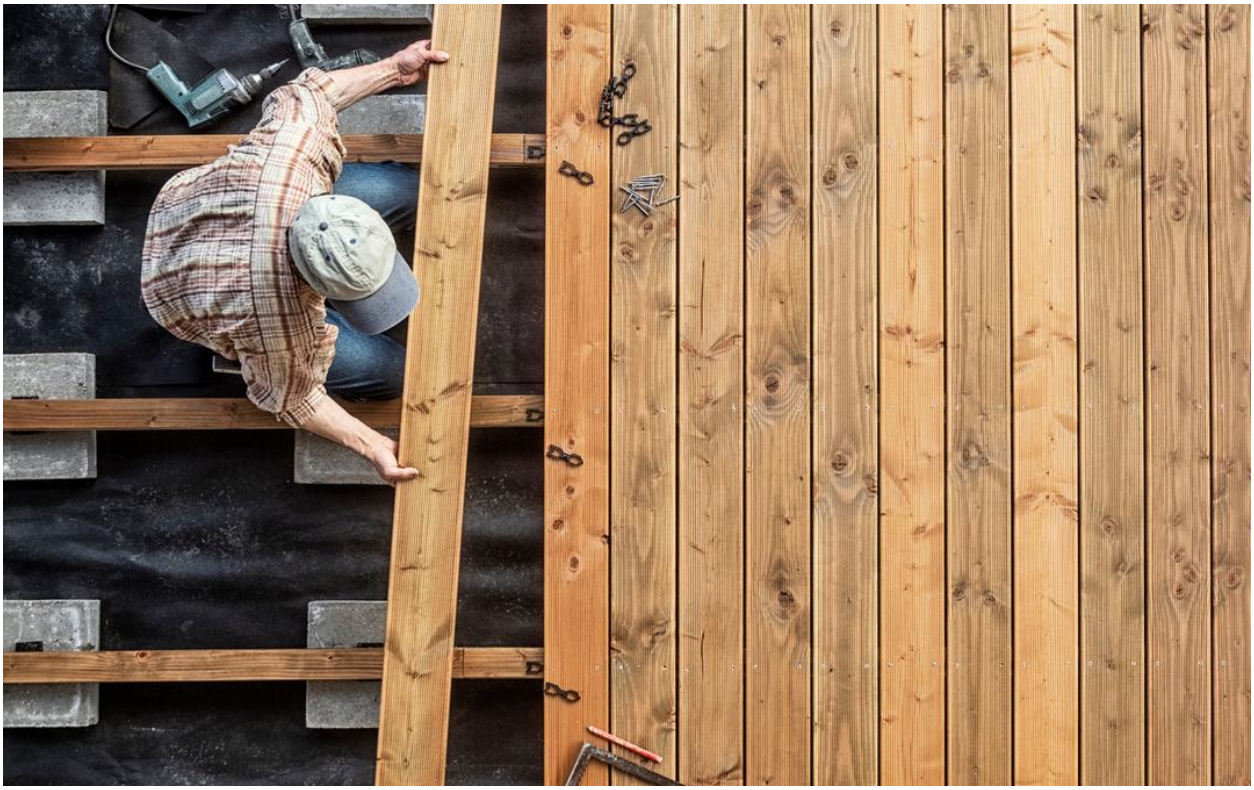

**Important Notes**

A deck is a floor system, the same as that within the dwelling unit, and must be designed accordingly. The design and construction of the deck must conform to the requirements of the current amended version of the Ontario Building Code as well as all other applicable by-laws.

If the deck is to be used to support a hot tub or similar structure, it is to be reviewed by a qualified individual (Professional Engineer), due to the increased load.

This guide is for informational purposes only. It is the responsibility of the Applicant/Designer to review the Ontario Building Code to ensure all information is complete, accurate, and up to date.

**General requirements**

A building permit is required for all decks except where the distance from the finished grade to the finished deck is not more than 600mm/24” and the deck is not supporting a roof.

Note: A deck must comply with the Ontario Building Code and Zoning By-Law requirements. For more information, contact The City of Kawartha Lakes Building and Septic Department at 705-324-9411 ext. 1288 or buildingpermits@kawarthalakes.ca.

**Designers qualification and registration requirements:**

Homeowners submitting designs for their own residence are exempt from qualification and registration requirements, however, individuals and agencies providing design services to the public have to meet the qualifications and registration requirements set out by the Ministry of Municipal Affairs and Housing. You can locate and/or confirm the qualification and registration status of a designer by referring to the Ministry’s on-line qualification and registration system (QuARTS) at https://www.search.quarts.mah.gov.on.ca/en/.

Any proposed prefabricated guard/railing system must have a set of stamped details provided by a licensed Engineer with the Province of Ontario (a manufacturer or building supply store would supply you these details at your request).

**The plans and details in this package are for reference and assistance only, they are not to be submitted as your plans. You must have your own design.**

**Sample Site Plan**

It is the responsibility of applicant/owner(s) to provide accurate site information for building permit applications including all dimensions, lot area and locations of property lines, sewage system, easements, right of ways, etc.”

Please see our Site Plan Guide under the Forms, applications and guides page.

**Example Deck Framing Plan**

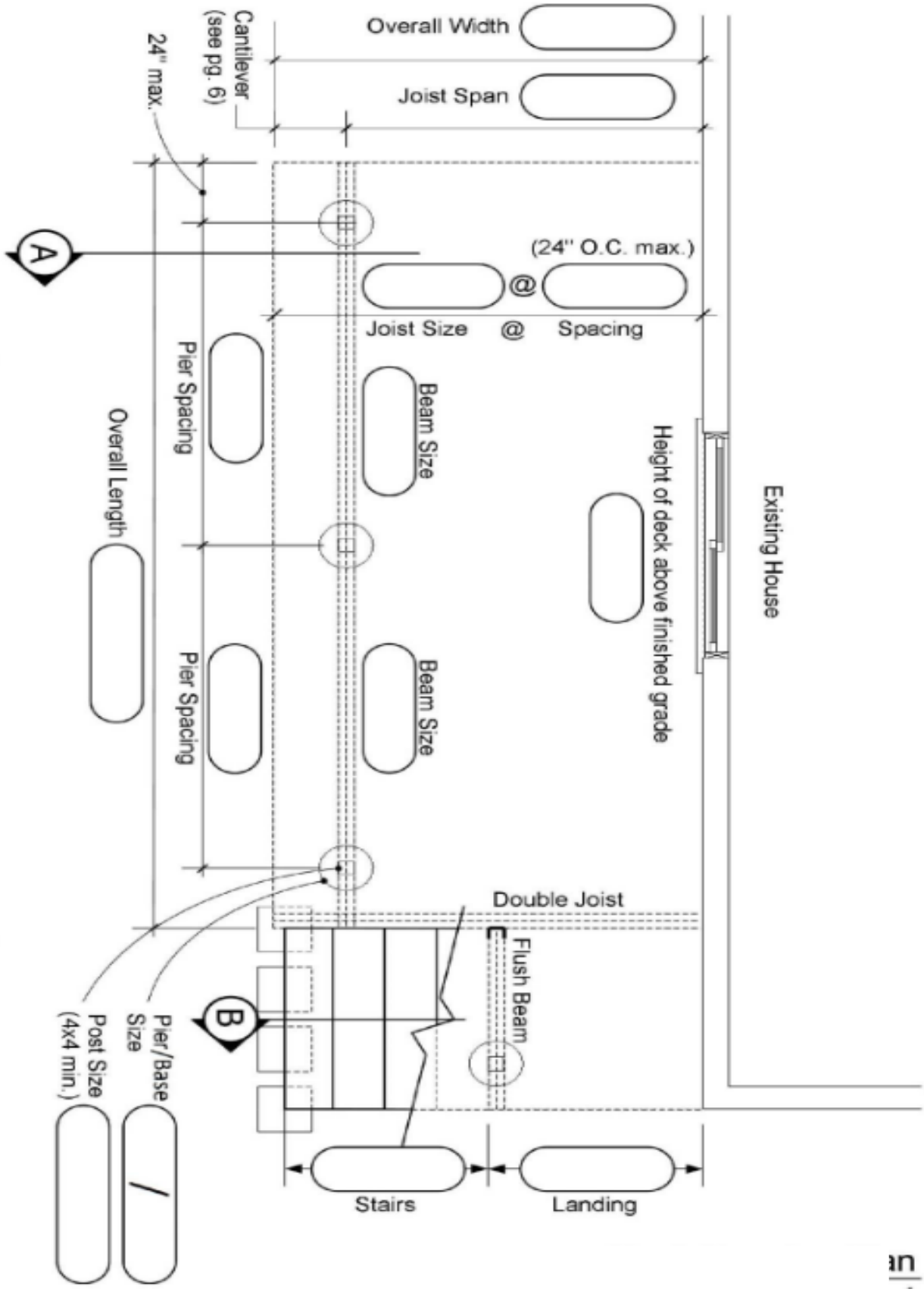

## Example Section Plan

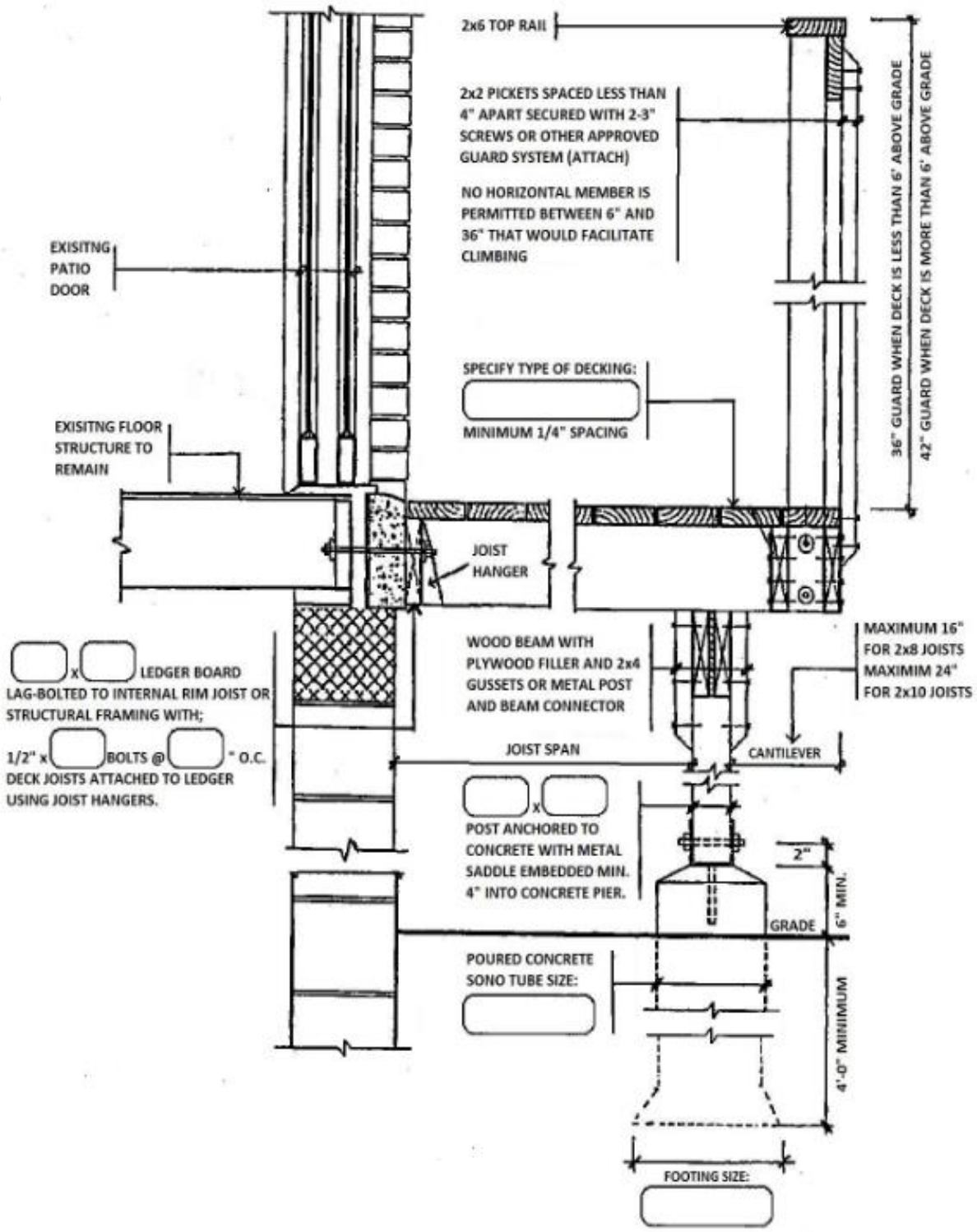

**Structural Requirements**

Concrete pier sizing (Sono tubes)

Note: This table is based on OBC min.75kPa (1570 psf) soil bearing capacity

**Joist Span**

| Joist Span | Pier Spacing | | | |
|---|---|---|---|---|
| | 1.2m (4'-0") | 1.8m (6'-0") | 2.4m (8'-0") | 3.0m (10'-0") |
| **1.8m (6'-0")** | 200mm (8") | 250mm (10") | 300mm (12") | 350mm (14") |
| **2.4m (8'-0")** | 250mm (10") | 300mm (12") | 350mm (14") | 400mm (16") |
| **3.0m (10'-0")** | 300mm (12") | 350mm (14") | 400mm (16") | 460mm (18") |
| **3.6m (12'-0"** | 300mm (12") | 350mm (14") | 400mm (16") | 460mm (18") |

**Floor Joist Span**

| Joist Spacing (on centre) | Joist Span | | | |
|---|---|---|---|---|
| | 1.8m (6'-0") | 2.4m (8'-0") | 3.0m (10'-0") | 3.6m (12'-0") |
| **300mm (12")** | 38 x 184 (2"x8") | 38 x 184 (2"x8") | 38 x 184 (2"x8") | 38 x 184 (2"x8") |
| **400mm (16")** | 38 x 184 (2"x8") | 38 x 184 (2"x8") | 38 x 184 (2"x8") | 38 x 235 (2"x10") |
| **600mm (24")** | 38 x 184 (2"x8") | 38 x 184 (2"x8") | 38 x 235 (2"x10") | 38 x 235 (2"x10") |

**Beam Sizing**

| Joist Size | Joist Span | Pier Spacing | | | |
|---|---|---|---|---|---|
| | | 1.2m (3'-0") | 1.8m (6'-0") | 2.4m (8'-0") | 3.0m (10'-0") |
| **38 x 184 (2"x8")** | **1.8m (6'-0")** | 2 - 38mm x 184mm (2 - 2"x8") | 2 - 38mm x 184mm ( 2 - 2"x8" ) | 2 - 38mm x 235mm ( 2 - 2"x10" ) | 2 - 38mm x 235mm ( 2 - 2"x10" ) |
| | **2.4m (8'-0")** | 2 - 38mm x 184mm ( 2 - 2"x8") | 2 - 38mm x 184mm ( 2 - 2"x8" ) | 2 - 38mm x 235mm ( 2 - 2"x10" ) | 3 - 38mm x 235mm ( 3 - 2"x10" ) |
| | **3.0m (10'-0")** | 2 - 38mm x 184mm ( 2 - 2"x8") | 2 - 38mm x 184mm ( 2 - 2"x8") | 2 - 38mm x 235mm ( 2 - 2"x10" ) | 3 - 38mm x 235mm ( 3 - 2"x10" ) |
| **38 x 235 (2"x10")** | **3.6m (12'-0")** | 2 - 38mm x 184mm ( 2 - 2"x8") | 2 - 38mm x 184mm ( 2 - 2"x8") | 2 - 38mm x 286mm ( 2 - 2"x12" ) | 2 - 38mm x 286mm ( 2 - 2"x12" ) |

* 2X8 joists required for wood railing (guard) support as per SB-7 of the Ontario Building Code.

**Note**: Soil bearing capacity to be considered as 1570 PSF (75 kPa) unless otherwise determined by the Chief Building Official.

**Connection of floor joist to beam support**

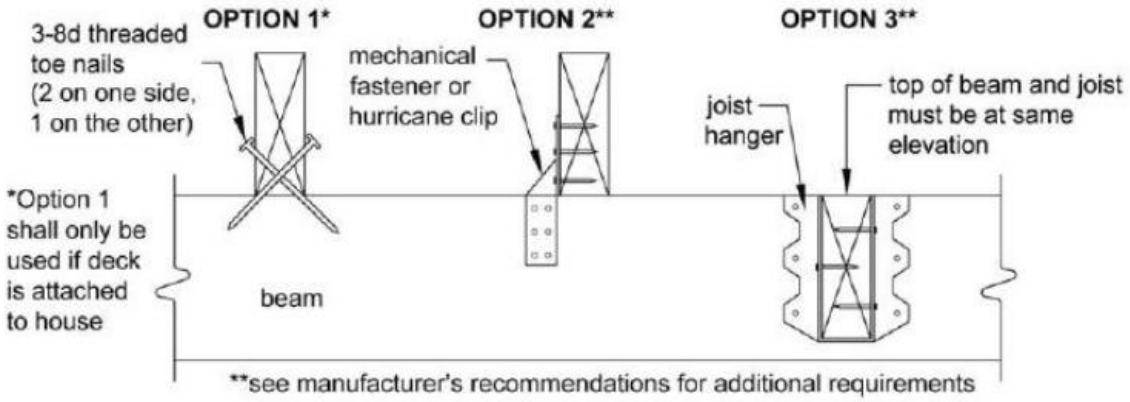


**Ledger board attachment**

- Decks are usually supported on one side by a ledger attached to the house. This ledger attachment is critical to ensure the deck is safely and securely supported at this point.
  When the ledger is attached to the house, there are very specific requirements that must be met. Follow the diagrams closely for the proper attachment of the ledger.
- The deck ledger shall NOT be nailed to the house - it must be lagged or bolted to the structure of the house.
- The size and spacing of the lag bolts (screws) are based on their capacity. Lag bolts (screws) values are assumed to be 325 pounds for 1/2-inch lag bolts (screws) and 190 pounds for 3/8-inch lag bolts (screws). The span of the floor joists determines how much load is being transferred to the ledger and thus to the lag bolts.

| **Lag Bolt Size** | **Joist Span** | | | |
|---|---|---|---|---|
| | **Up to 1.8m (6'-0")** | **2.4m (8'-0")** | **3.0m (10'-0")** | **3.6m (12'-0")** |
| **12.7mm (1/2")** | 812mm (32"o.c.) | 400mm (16"o.c.) | 400mm (16"o.c.) | 300mm (12"o.c.) |
| **Equivalent 16" o.c. Joist Spacing** | Every Other Joist Space | Every Joist Space | Every Joist Space | Each Joist Space with Two Every Other Space |
| **9.5mm(3/8")** | 610mm (24"o.c.) | 300mm (12"o.c.) | 300mm (12"o.c.) | 200mm (8"o.c.) |
| **Equivalent 16" o.c. Joist Spacing** | Two Every Third Joist Space | Each Joist Space with Two Every Other Space | Each Joist Space with Two Every Other Space | Two Each Joist Space Three Every Other Space |

**Deck ledger to house attachment – Lag Bolt Spacing (See Diagrams)**

- Deck ledgers shall be minimum 2x8 pressure-preservative-treated No. 2 grade lumber or other approved materials as determined by good engineering practices.
- When solid-sawn pressure-preservative-treated deck ledgers are attached to engineered wood products (structural composite lumber rimboard or laminated veneer lumber), the ledger board attachment shall be designed in accordance with the manufacturer's recommendations or good engineering practices.
- Pilot holes shall be pre-drilled with a size between 17/32" to 9/16".
- Lag screws are only permitted where existing site conditions can be confirmed.

**Structural Requirements**

****Refer to Lag Bolt Spacing Table****

**Ledger Board Fastener Spacing**

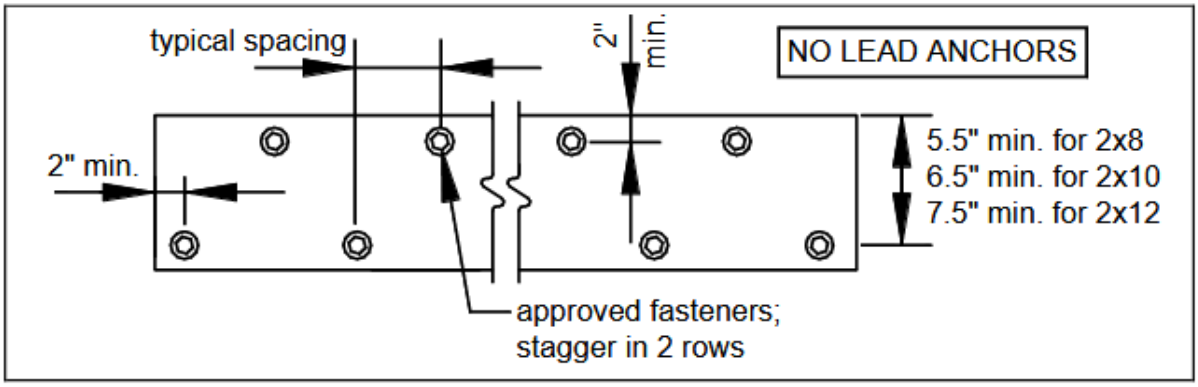


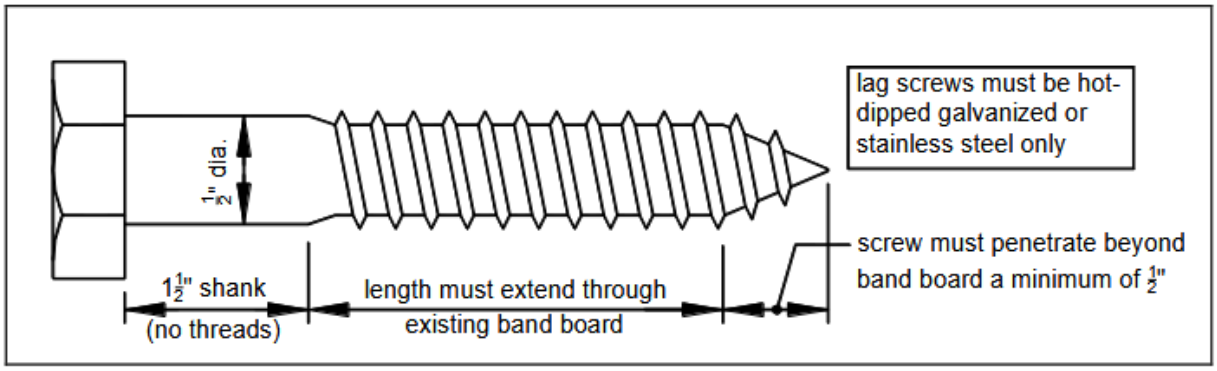

**Lag screw**

Each lag screw shall have pilot holes drilled as follows:

1. Drill a ½" diameter hole in the ledger board,
2. Drill a 5/16" diameter hole into the band board of the existing house.

**Do not drill a ½" diameter hole into the band board.**

The threaded portion of the lag screw shall be inserted into the pilot hole by turning.

**Do not drive lag screws with a hammer.**

Use soap or a wood- compatible lubricant as required to facilitate tightening.
Each lag screw shall be thoroughly tightened (snug but not over-tightened to avoid wood damage).

**General attachment of ledger board to house structure**

**(Ledger Board Attachment)**

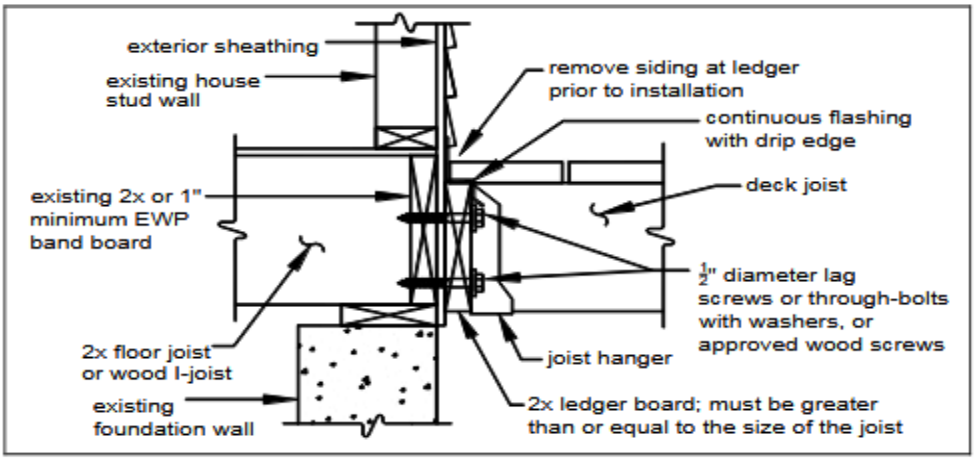


**Attachment of Ledger Board to Foundation Wall**
**(Concrete or Solid Masonry)**

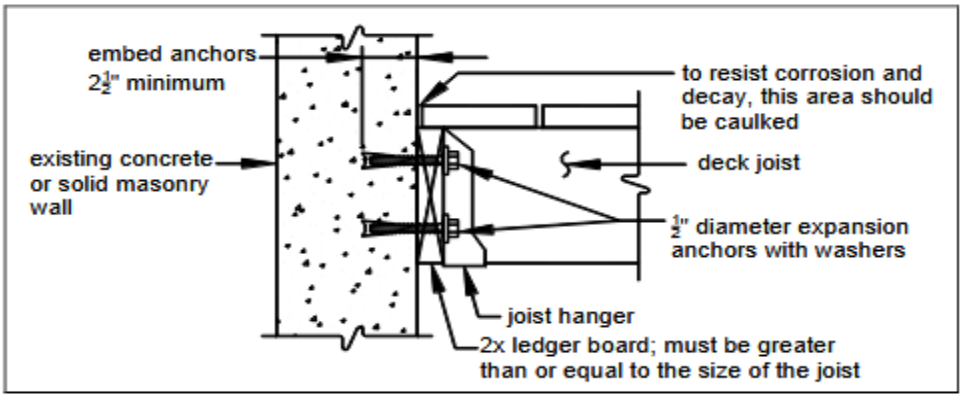

**Attachment to ledger board to foundation wall (Hollow Masonry)**

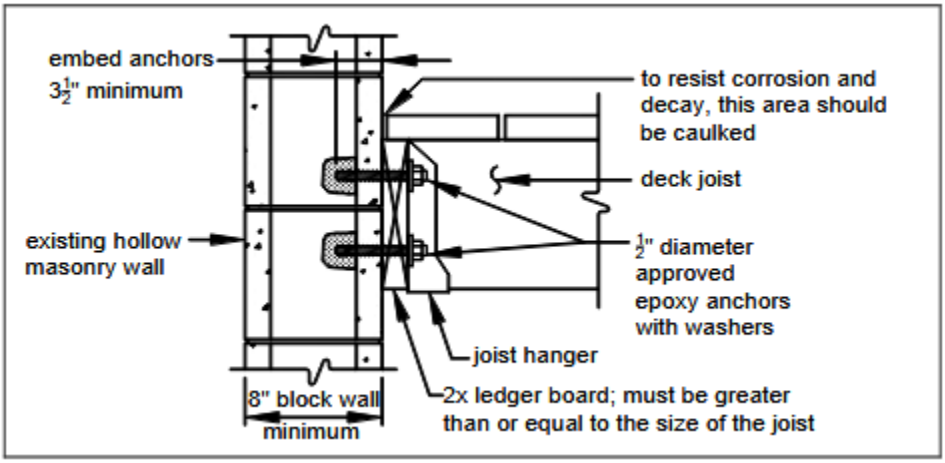


**Post to beam options**

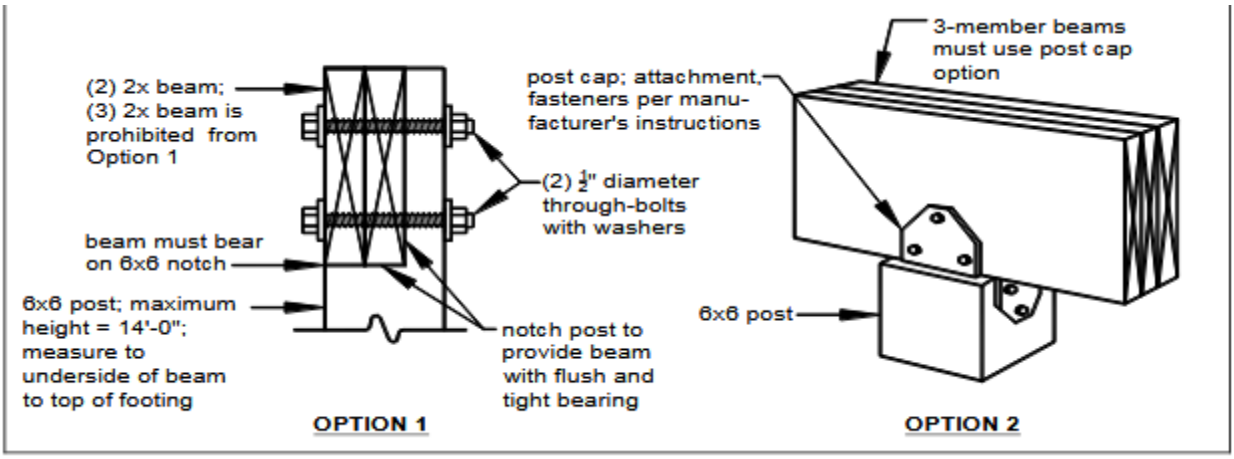


**Guards (Often referred to as railings)**

**Guards**

A Guard is the component of a deck that is designed to prevent someone from falling off the walking surface. If you intend to construct a wooden guard, please see SB-7 Guards for Residential Decks in the Ontario Building Code for the requirements for installation.

If the guard you select is not listed in the SB-7 guidelines, two copies of the manufacturer's installation instructions or proprietary products stamped and signed by an engineer licensed in the province of Ontario must be submitted. These details should be available where you intend to purchase the product. Examples of this are pre-manufactured guards constructed out of glass or aluminum. As previously mentioned, these are proprietary products that require testing to ensure compliance with the OBC.

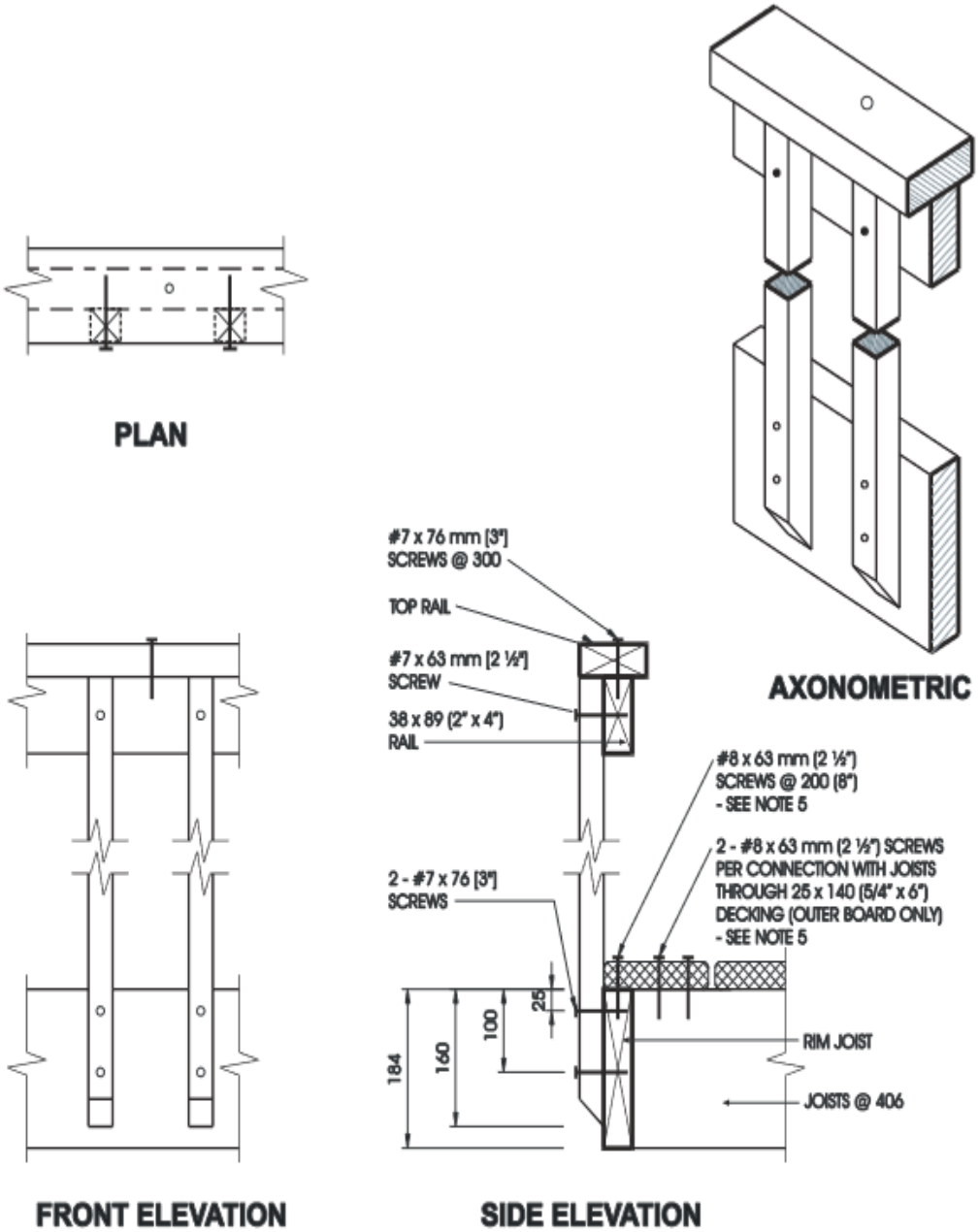


## Detail ED-1

**Exterior Connection: Cantilevered Picket Screwed to Rim Joist**

**Notes:**

1. Provide a suitable post, return, or solid support at each end of the guard.
2. Wood for cantilevered pickets shall be Douglas Fir-Larch, Spruce-Pine-Fir, or Hem-Fir Species.
3. Fasten rim joist to each floor joist with 3 - 82 mm (3¼") nails.
4. Dimensions shown are in mm unless otherwise specified.
5. The outer deck board shall not be less than 140 mm (6" nominal) wide. Where 38 mm (2" nominal) thick boards are used, the length of the wood screws shall be not less than 76 mm (3").

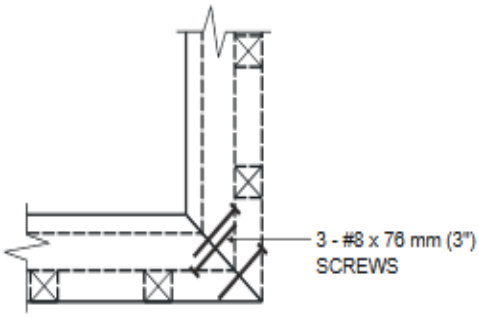


**PLAN TOP RAIL**

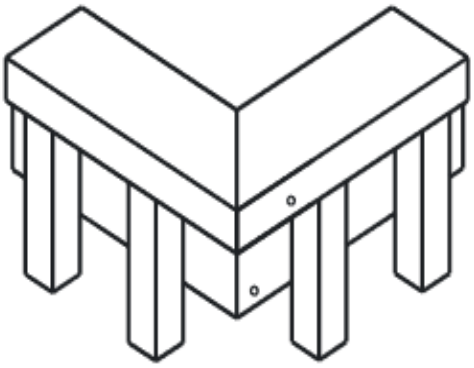

**AXONOMETRIC**

ONE FASTENER IN HORIZONTALLY ORIENTATED PORTION OF TOP RAIL
AND TWO IN VERTICALLY ORIENTATED PORTION.

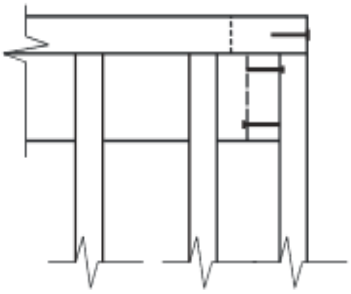

**FRONT TOP RAIL**

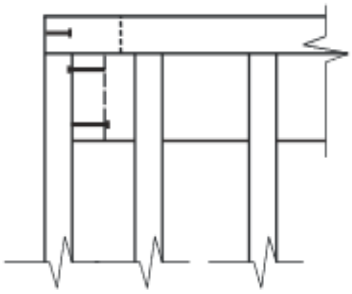

**SIDE TOP RAIL**

## Detail ED-5

### Exterior Connection: Corner Joint

**Notes:**

1. Screws fastening pickets are omitted for clarity.
2. Provide a minimum of 10 pickets beyond the return if end restraint of the guard is provided by this return detail only.

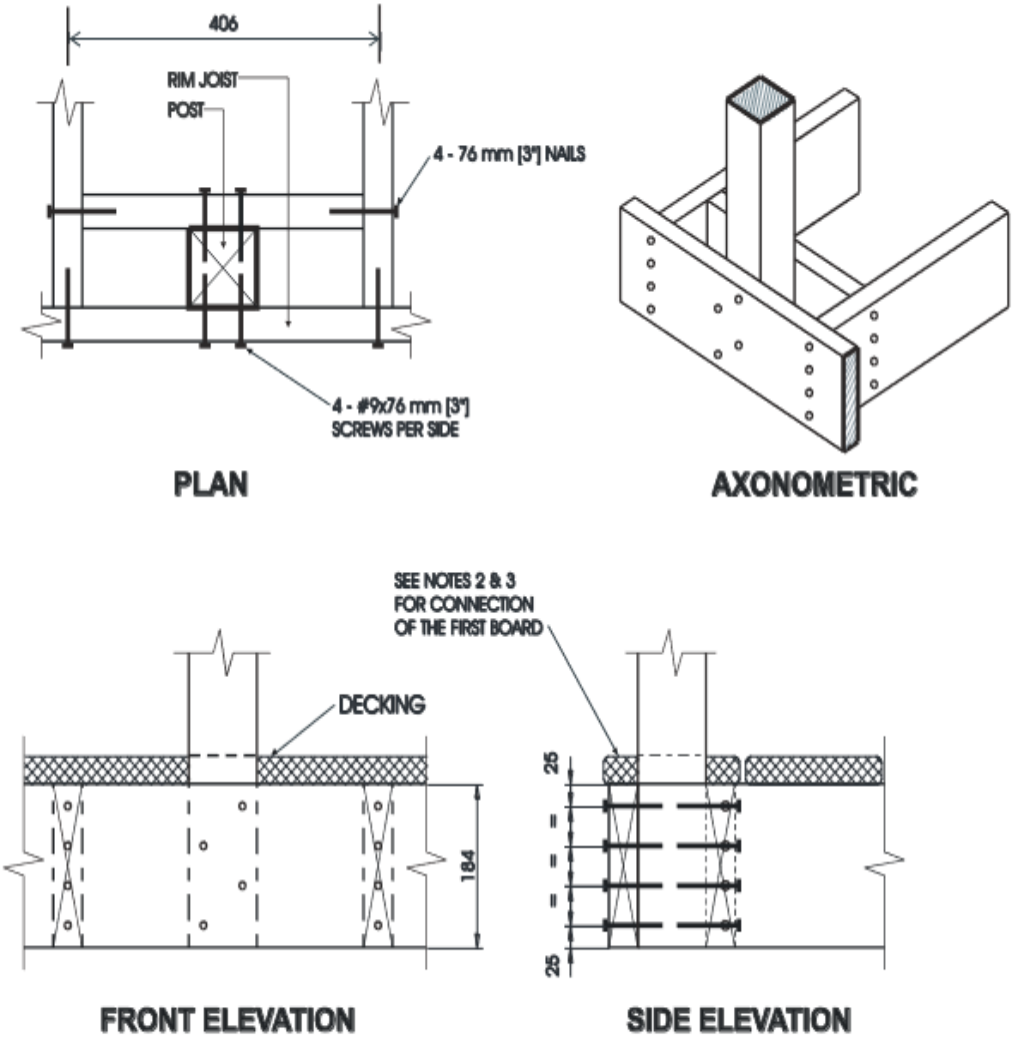


## Detail EB-2

### Exterior Connection: Post Screwed to Rim Joist

**Notes:**

1. Decking is omitted from the plan view and the axonometric view for clarity.
2. Fasten 25 mm x 140 mm (5/4" x 6" nominal) outer deck board to rim joist with 63 mm (2 1/2") nails at 300 mm (12").
3. Fasten 25 mm x 140 mm (5/4" x 6" nominal) outer deck board to floor joist with 1 - 63 mm (2 1/2") nail at each joist.
4. The post may be positioned anywhere between the joists.
5. #9 screws may be replaced by #8 screws if the maximum spacing between posts is not more than 1.20 m (3'-11").
6. Dimensions shown are in mm unless otherwise specified.

| MAXIMUM SPAN OF RAIL BETWEEN POSTS | |
|---|---|
| Species | Maximum Span, m (ft-in) |
| Douglas Fir-Larch, Hem-Fir, Spruce-Pine-Fir | 1.56 (5'-1") |
| Northern Species | 1.20 (3'-11") |
| Column 1 | 2 |

## Stairs

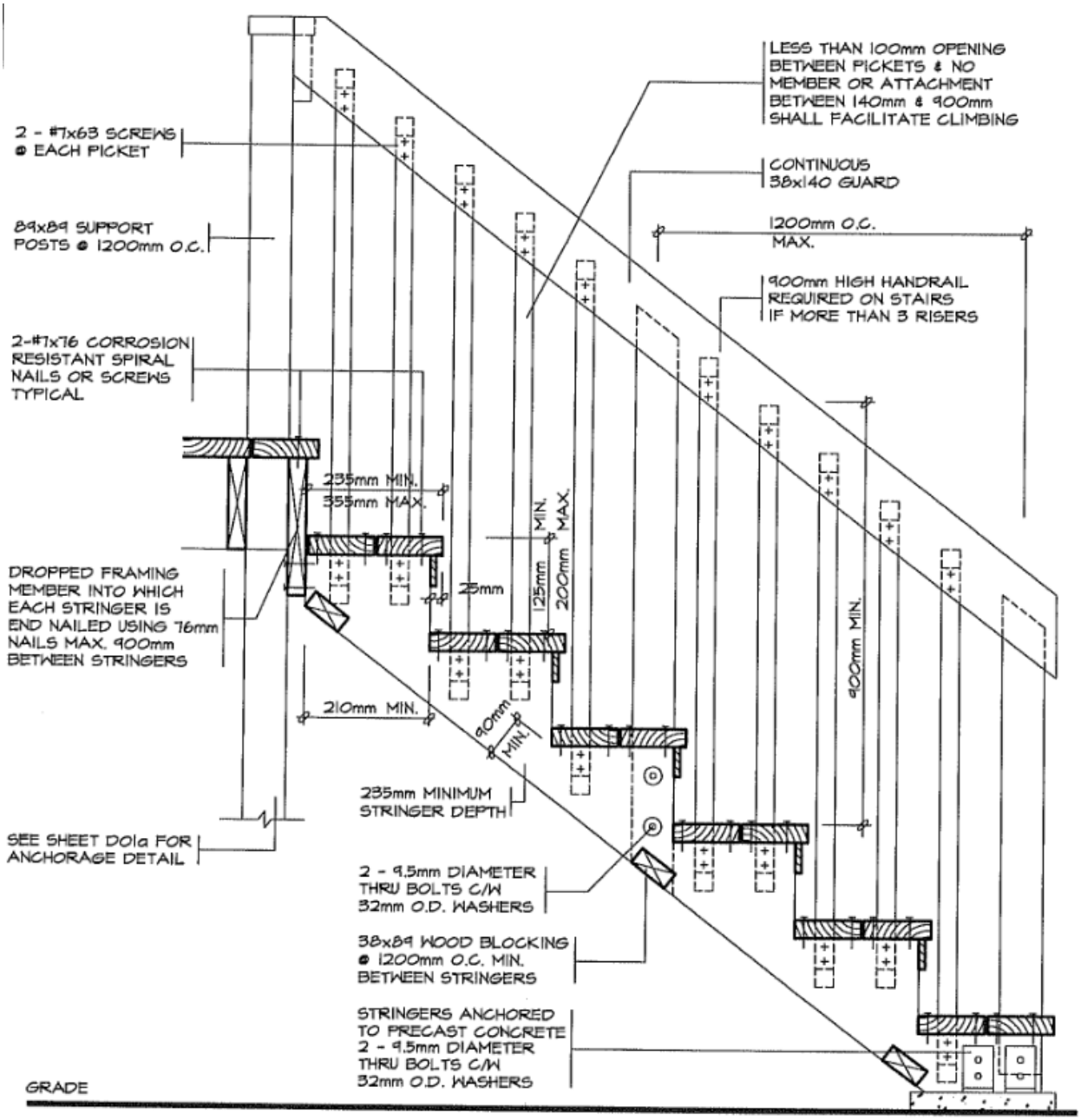
LESS THAN 100mm OPENING BETWEEN PICKETS & NO MEMBER OR ATTACHMENT BETWEEN 140mm & 900mm SHALL FACILITATE CLIMBING
2 - #7x63 SCREWS @ EACH PICKET
CONTINUOUS 38x140 GUARD
89x89 SUPPORT POSTS @ 1200mm O.C.
1200mm O.C. MAX.
900mm HIGH HANDRAIL REQUIRED ON STAIRS IF MORE THAN 3 RISERS
2-#7x76 CORROSION RESISTANT SPIRAL NAILS OR SCREWS TYPICAL
235mm MIN.
355mm MAX.
MIN.
MAX.
125mm
200mm
25mm
DROPPED FRAMING MEMBER INTO WHICH EACH STRINGER IS END NAILED USING 76mm NAILS MAX. 900mm BETWEEN STRINGERS
400mm MIN.
210mm MIN.
90mm MIN.
235mm MINIMUM STRINGER DEPTH
SEE SHEET D01a FOR ANCHORAGE DETAIL
2 - 9.5mm DIAMETER THRU BOLTS C/W 32mm O.D. WASHERS
38x89 WOOD BLOCKING @ 1200mm O.C. MIN. BETWEEN STRINGERS
STRINGERS ANCHORED TO PRECAST CONCRETE 2 - 9.5mm DIAMETER THRU BOLTS C/W 32mm O.D. WASHERS
GRADE