Heritage Museum Washroom & Walkway

Town of Three Rivers

564 Main St.
Montague, PE
C0A 1R0

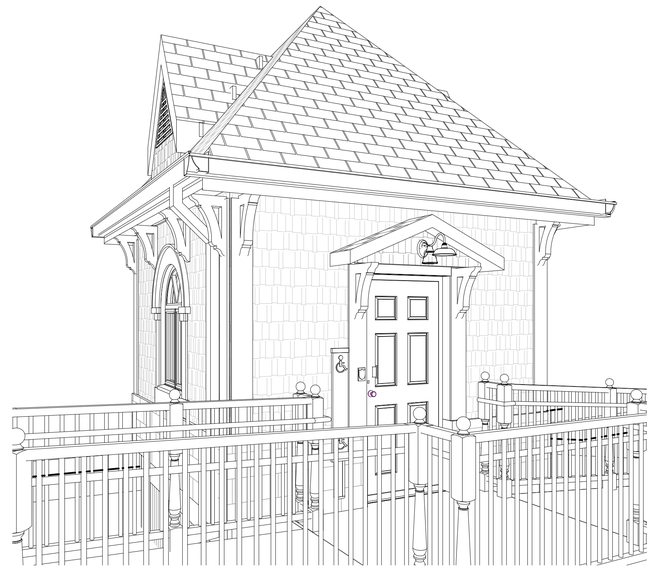

CIVIL

C100	Site Plan

STRUCTURAL

S100	Structural Plans, Details, & Notes

ARCHITECTURAL

A000	Cover Page
A001	Project Information, Code Analysis, Notes & Schedules
A002	Outline Specifications & Schedules
A030	3D Views
A100	Architectural Plans
A200	Exterior Elevations
A300	Building & Wall Sections
A350	Section & Plan Details
A1400	Room Finish Plans

MECHANICAL

M100	Plumbing and Ventilation Sheet
M001	Specifications Sheet
M101	Details and Schedules

ELECTRICAL

E001	Specifications
E002	Site Plan, Details & Legend
E100	Floor Plan, Details & Schedules

COLES
Architecture + Engineering + Project Management

Heritage Museum Washroom & Walkway
Town of Three Rivers
564 Main St.
Montague, PE
C0A 1R0

COLES
Architecture + Engineering + Project Management

Coles Associates Ltd.
Suite 201, 85 Fitzroy Street
Charlottetown, PE, Canada, C1A 1R6
Phone: (902) 368-2300
www.colesassociates.com

ARCHITECTS ASSOCIATION 19-12 CERTIFICATE of PRACTICE Scott Daniel MacNeill Coles Associates Ltd. AAPEI OF PRINCE EDWARD ISLAND
#261155 / RP / Nov 5, 2026

Rev. No.:	Issued for:	Date: (YYYY-MM-DD)
0	Permit	2026-11-05

Scale:
Dm By: JIS
Chk By: SDM
Rev. No.: 0
Project Number: 261155
Drawing Number: A000

THIS DRAWING AND ALL COPYRIGHT THEREIN ARE THE SOLE AND EXCLUSIVE PROPERTY OF COLES ASSOCIATES LTD. REPRODUCTION OR USE OF THIS DRAWING IN WHOLE OR IN PART BY ANY FORM WHATSOEVER WITHOUT THE PRIOR WRITTEN CONSENT OF COLES ASSOCIATES LTD. IS STRICTLY PROHIBITED.

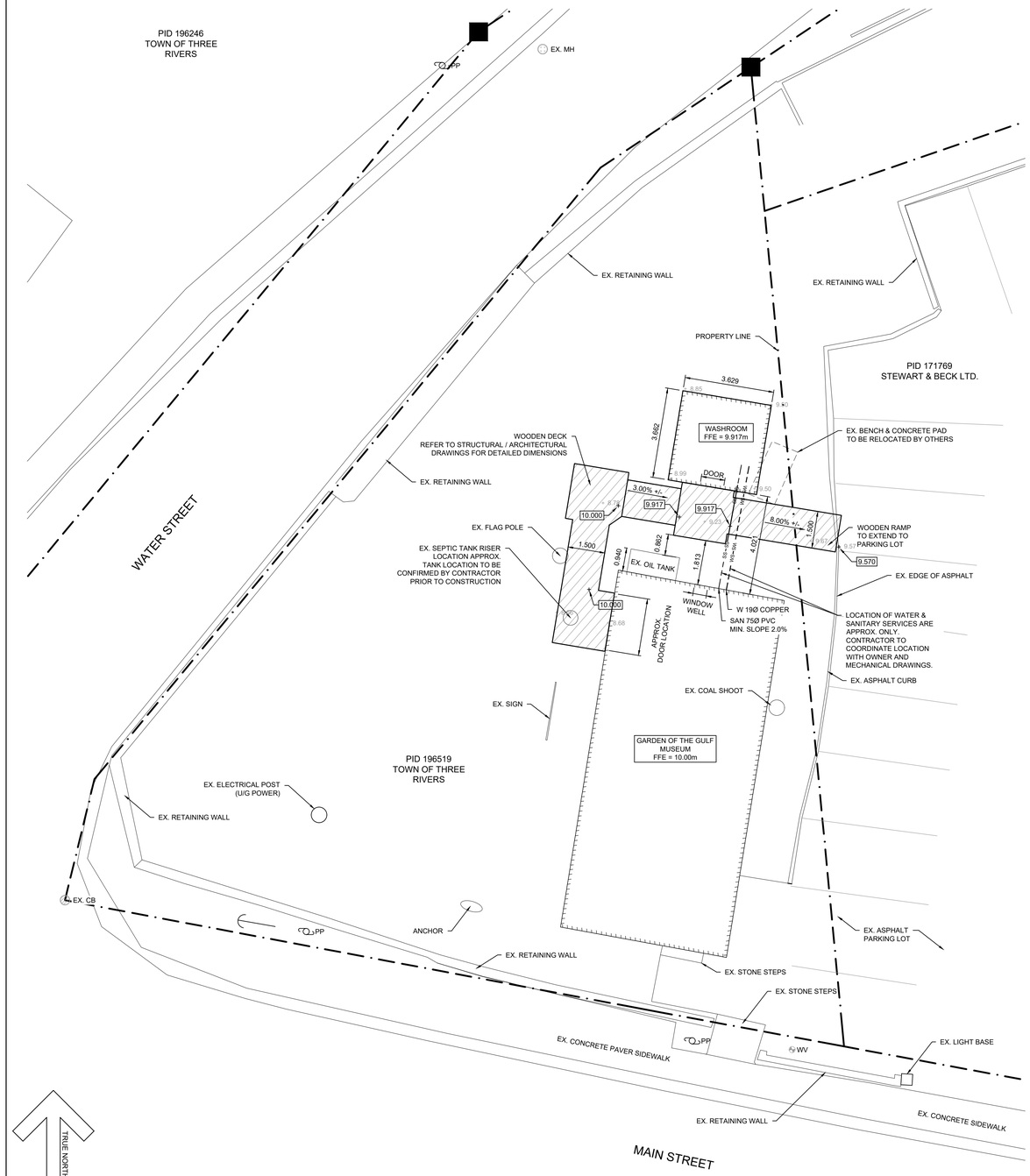

1 / C100 PLAN: SITE
SCALE: 1:100

NOTE:
1. USE BRACING SHIELD FOR TRENCHES WITHIN ROADWAYS TO REDUCE EXCAVATION WIDTH AND ASPHALT REPLACEMENT. ALL ASPHALT TO BE SAWCUT TO A DEPTH OF 125mm MIN. PRIOR TO EXCAVATION, WHERE APPLICABLE.

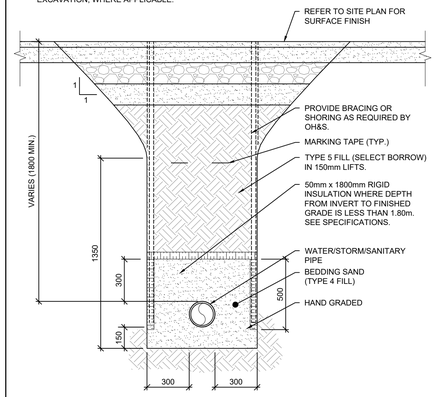

2 / C100 SECTION: TYPICAL TRENCH
SCALE: 1:20

DETAIL IS TO BE READ IN CONJUNCTION WITH SECTION 31 10 00. EROSION CONTROL MEASURES ARE TO BE IN PLACE BEFORE ANY WORK ON SITE BEGINS AND ARE TO REMAIN IN PLACE UNTIL THE WORK OF THIS TRADE PACKAGE IS STABILIZED. (NO SEDIMENTARY RUN OFF TO AREAS OFF SITE IS ACCEPTABLE.)

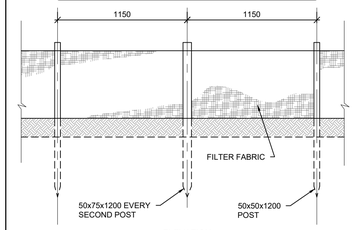

ELEVATION

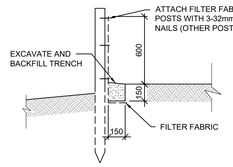

SECTION

3 / C100 DETAIL: SILT FENCE
SCALE: 1:25

LEGEND

	PROPERTY LINE
	BUILDING OUTLINE
SAN → NYS	SANITARY SEWER
SS→SS	SANITARY SERVICE
ESAN –▷ NYES	EXISTING SANITARY SEWER
ES – SS	EXISTING SANITARY SERVICE
FM → FLX	SANITARY FORCEMAIN
FM → FLX	EXISTING SANITARY FORCEMAIN
STM → FLS	STORM SEWER
ESTM –▷ FLSS	EXISTING STORM SEWER
WM–WM	WATER MAIN
WS–SM	WATER SERVICE
WM–WM	EXISTING WATER MAIN
WS–SM	EXISTING WATER SERVICE
DH – HO	EXISTING DISTRICT HEAT LINE
UG – DT	UNDERGROUND ELECTRICAL
UG – DT	EXISTING UNDERGROUND ELECTRICAL
OH – HO	OVERHEAD ELECTRICAL
OH – HO	EXISTING OVERHEAD ELECTRICAL
	TOP OF SLOPE
	TOE OF SLOPE
	DITCH / SWALE
	ASPHALT PAVEMENT
	ASPHALT PAVEMENT EXISTING
	CONCRETE SURFACE
	GRASSED AREA
	GRAVEL SURFACE
PP	UTILITY POLE
FH	FIRE HYDRANT
CB	STORM CATCH BASIN
MH	SANITARY MANHOLE
WV	WATER VALVE
CS	WATER CURB STOP
23.50	NEW ELEVATION
23.50	EXISTING ELEVATION

DETAIL IS TO BE READ IN CONJUNCTION WITH SECTION 31 10 00. EROSION CONTROL MEASURES ARE TO BE IN PLACE BEFORE ANY WORK ON SITE BEGINS AND ARE TO REMAIN IN PLACE UNTIL THE WORK OF THIS TRADE PACKAGE IS STABILIZED. (NO SEDIMENTARY RUN OFF TO AREAS OFF SITE IS ACCEPTABLE.)

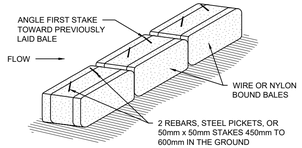

ANCHORING DETAIL

COMPLY WITH ALL ENVIRONMENTAL REGULATIONS & PROVIDE ALL NECESSARY ENVIRONMENTAL PROTECTION INCLUDING, SILT FENCES, SILT DAMS, SEDIMENT TRAPS, DUST CONTROL, ETC.

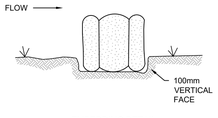

EMBEDDING DETAIL

4 / C100 DETAIL: EROSION CONTROL BERM
SCALE: 1:25

GENERAL NOTES:

1. CONTRACTOR SHALL COORDINATE THIS WORK AND COOPERATE WITH THE OWNER AND AGENCIES HAVING JURISDICTION.
2. THE LIMIT OF CONTACT IS GENERALLY BOUNDED BY THE PROPERTY LINE AND ALSO INCLUDES ALL WORK IMPLEMENTED OR SHOWN WITHIN AND OUTSIDE THE LOT. THE SCOPE OF WORK SHALL INCLUDE ALL CIVIL WORKS SHOWN OR IMPLIED ON THE DRAWINGS AND SHALL INCLUDE ANY ADDITIONAL WORK LISTED IN THE SPECIFICATIONS AND TENDER DOCUMENTS.
3. CONTRACTOR MUST VISIT THE SITE PRIOR TO CONSTRUCTION AND BE FAMILIAR WITH EXISTING CONDITIONS.
4. VERIFY ALL DIMENSIONS AND REPORT ANY DISCREPANCIES TO THE CONSULTANT BEFORE PROCEEDING WITH THE WORK.
5. ALL DIMENSIONS AND ELEVATIONS ARE IN METRIC UNITS U.N.O.
6. EXISTING GRADES SHOWN ARE BASED OF A LIMITED SITE SURVEY PERFORMED BY COLES ASSOCIATES LTD. ON OCTOBER 3, 2026. ELEVATIONS SHOWN ARE RELATIVE TO EACH OTHER ONLY, NOT COORDINATED WITH GEODETIC DATUM.
7. CONTRACTOR TO VERIFY SITE ELEVATIONS PRIOR TO CONSTRUCTION.
8. THESE DRAWINGS SHALL BE VIEWED IN CONJUNCTION WITH THE ARCHITECTURAL, STRUCTURAL, MECHANICAL, ELECTRICAL AND LANDSCAPE SITE DRAWINGS, CONTRACT DOCUMENTS AND SPECIFICATIONS. CONTRACTOR SHALL ALSO REVIEW AND IMPLEMENT THE RECOMMENDATIONS LISTED IN THE GEOTECHNICIAL REPORT.
9. PRIOR TO COMMENCING WORK, THE CONTRACTOR SHALL VERIFY THE EXACT LOCATION AND ELEVATIONS OF ALL EXISTING UTILITIES AND SERVICES (SHOWN OR NOT SHOWN ON DRAWINGS) IN THE FIELD WITHIN THE CONTRACT LIMIT. INFORMATION SHOWN ON PLANS IS APPROXIMATE ONLY.
10. UNDERGROUND WATER, SEWER, TELEPHONE AND POWER SERVICES EXIST BENEATH THE SITE. EXERCISE CAUTION IN EXCAVATION AND PROTECT FACILITIES FROM DAMAGE. CONTRACTOR TO REPAIR DAMAGES AT NO COST TO THE OWNER. WORK SHALL BE CARRIED OUT TO THE SATISFACTION OF THESE AUTHORITIES. CONTACT UTILITIES BEFORE EXCAVATING.
11. PRIOR TO CONSTRUCTION, CONTRACTOR MUST REVIEW THE DEPTH OF ALL NEW UNDERGROUND SERVICES AND ADJUST DEPTH OF ALL SERVICES INCLUDING WATER, SANITARY SEWER, STORM SEWER, U/G ELECTRICAL & COMMUNICATION, WHERE INTERFERENCE OCCURS. ADVISE & OBTAIN APPROVAL FROM CONSULTANT BEFORE PROCEEDING WITH ANY CHANGES. ADJUST TOPS OF ALL EXISTING MANHOLES, CATCH BASINS, VALVES, BOXES, ETC. TO SUIT FINISH GRADES OF PARKING LOTS & SITE WORK. COSTS ASSOCIATED WITH THIS TO BE INCLUDED IN TENDER PRICE.
12. THE CONTRACTOR TO INCLUDE IN THE CONTRACT PRICE COSTS ASSOCIATED WITH OVER EXCAVATION, BACKFILLING AND REINSTATEMENT.
13. PROVIDE TEMPORARY SUPPORT TO UTILITY POLES AS REQUIRED BY THE UTILITIES. FINAL LOCATIONS OF RELOCATED UTILITY POLES TO BE COORDINATED ON-SITE BETWEEN CONTRACTOR & UTILITIES. ENSURE NEW OVERHEAD WIRE PATHS MEET ALL REQUIRED CLEARANCES AS REQUIRED BY OH&S.
14. THE WORK SHALL BE IN ACCORDANCE WITH THE 2020 NATIONAL BUILDING CODE OF CANADA & APPLICABLE STANDARDS.
15. PERFORM WORK & COMPLY WITH ALL FEDERAL, PROVINCIAL AND MUNICIPAL BY-LAWS AND REGULATIONS.
16. CONTRACTOR IS RESPONSIBLE FOR THE SUPPLY, INSTALLATION & TESTING FOR ANY ADDITIONAL MATERIALS & EQUIPMENT NOT SPECIFIED OR INDICATED ON THE DRAWINGS TO COMPLETE WORK ENSURING THAT ALL SYSTEMS ARE FULLY OPERATIONAL AND MEETING THE FUNCTIONAL REQUIREMENT OF THIS PROJECT.
17. CONTRACTOR IS RESPONSIBLE FOR THE SUPPLY, INSTALLATION AND TESTING OF ALL PIPES AND APPURTENANCES AS PER APPLICABLE STANDARDS & AS REQUIRED BY REGULATIONS FOR A COMPLETE OPERATIONAL SYSTEM
18. THE CONTRACTOR WILL BE REQUIRED TO MAINTAIN TWO WAY TRAFFIC AT ALL TIMES DURING THIS CONTRACT AND ACCESS FOR EMERGENCY VEHICLES ON CONSTRUCTION SITE. PROVIDE SIGNS, BARRICADES, FLAGGERS AS PER APPLICABLE REGULATIONS.
19. ALL CONSTRUCTION SHALL BE CARRIED OUT IN ACCORDANCE WITH THE REQUIREMENTS OF THE OCCUPATIONAL HEALTH AND SAFETY ACT AND REGULATIONS. ANY FINES OR CHARGES FOR UNSAFE WORKING CONDITIONS ARE SOLELY THE RESPONSIBILITY OF THE CONTRACTOR.
20. THE CONTRACTOR IS RESPONSIBLE FOR PREVENTING MUD TRACKING ONTO THE PUBLIC AND PRIVATE RIGHT OF WAYS; AND IS, AT THEIR EXPENSE, RESPONSIBLE FOR CLEANING TRACKED MUD FROM THE R.O.W. AS DIRECTED BY THE MUNICIPALITY.
21. THE CONTRACTOR IS RESPONSIBLE FOR NECESSARY GRADING AND DUST CONTROL AS DIRECTED BY THE AGENCIES HAVING JURISDICTION OR THE OWNER'S SITE REPRESENTATIVE.
22. ALL TRENCHES WITHIN CITY RIGHT OF WAYS MUST BE BACKFILLED AT THE END OF EACH DAY.
23. REPAIR & REINSTATE DISTURBED ASPHALT PAVEMENT, GRASSED & LANDSCAPED AREAS, SIGNS, RETAINING WALLS, ETC., DAMAGED BY WORK OF CONTRACT INCLUDING ALL AREAS IMPACTED BEYOND LIMIT OF CONTRACT. TOPSOIL & SEED/SOD (AS DIRECTED) ALL GRASSED SURFACES U.N.O.
24. NO GEOTECHNICAL INVESTIGATION WAS CARRIED.
25. ADJUST TOPS OF CB'S, MH'S, WATER VALVES, CURB STOPS, AND ANY UTILITIES AFFECTED BY THE WORK OF THIS CONTRACT AND NECESSARY BY THE CONSULTANT/OWNER TO SUIT SITE CONDITIONS.

ENVIRONMENTAL PROTECTION NOTES:

1. ENVIRONMENTAL PROTECTION MEASURES SHALL BE CARRIED OUT TO THE SATISFACTION OF THE CONSULTANT &, AUTHORITIES HAVING JURISDICTION AND THE COST OF ALL THESE DEVICES & MEASURES SHALL BE INCLUDED IN THE CONTRACT PRICE.
2. ALL WORK TO BE PERFORMED IN ACCORDANCE WITH PEI OCCUPATIONAL HEALTH & SAFETY ACT, FEDERAL, PROVINCIAL & MUNICIPAL BY-LAWS & REGULATIONS.
3. INSTALLATION OF ENVIRONMENTAL CONTROLS SHALL BE A FIRST STEP IN THE CONSTRUCTION SEQUENCE, THEIR DESIGN, INSTALLATION AND MAINTENANCE SHALL BE AS PER PEI TIE ENVIRONMENTAL PROTECTION PLAN.
4. CONSTRUCT & INSTALL AT TOE OF SLOPE AROUND PERIMETER OF ALL TEMPORARY AND PERMANENT CONSTRUCTION AREAS INCLUDING AROUND STOCKPILES OF FILL SILT FENCES & EROSION CONTROL DEVICES.
5. ALL ENVIRONMENTAL CONTROLS (E.G. SILT FENCING, CHECK DAMS, SEDIMENT COLLECTION PONDS, ETC.) SHALL BE IN PLACE PRIOR TO, DURING AND AFTER PROJECT ACTIVITIES TO AVOID OFFSITE SILTATION.
6. MAINTAIN DEVICES ON A DAILY BASIS TO PREVENT SEDIMENTS FROM THE WORK AREAS FROM ENTERING ANY WATER COURSE OR CATCH BASINS. REPLACE FENCES IF DAMAGED. REMOVE ACCUMULATED SEDIMENTS TO PREVENT BLOCKAGE OF FENCES & DAMS AS DIRECTED BY CONSULTANT.
7. REMOVE & REPLACE EROSION CONTROL STRUCTURES WHEN THEY BECOME CLOGGED WITH SOIL PARTICLES OR AS DIRECTED BY CONSULTANT.
8. INSTALL SEDIMENT COLLECTION POND AT END OF THE OUTFALL & AT THE END OF THE DITCHES TO FILTER SEDIMENT FROM SURFACE RUNOFF BEFORE IT IS DISCHARGED TO WATERCOURSE. ENSURE THAT RUNOFF IS DIRECTED THROUGH SEDIMENT COLLECTION PONDS.
9. DO NOT DISTURB EXISTING VEGETATION ANY MORE THAN NECESSARY TO COMPLETE EACH PHASE OF THE PROJECT.
10. INSTALL A LAYER OF MULCH OR AN EROSION CONTROL BLANKET TO ALL EXPOSED SLOPES THAT IS NOT IMMEDIATELY UNDER CONSTRUCTION APPLIED AND MAINTAINED UNTIL THE AREA IS READY TO BE COMPLETED, SHAPED AND STABILIZED WITH SEEDING, SOD OR RIPRAP.
11. TOPSOIL & SEED ALL EXPOSED & BARREN SOIL ASAP.
12. THE CONTRACTOR IS TO HAVE ON HAND, THE APPROPRIATE EMERGENCY RESPONSE PHONE NUMBERS AND CONTACTS TO ALERT THE APPROPRIATE AUTHORITIES OF POSSIBLE CONTAMINATION SHOULD A SPILL OCCUR.

COLES
Architecture + Engineering + Project Management
Coles Associates Ltd.
Suite 201, 85 Fitzroy Street
Charlottetown, PEI, Canada, C1A 1R6
Phone: (902) 368-2300
www.colesassociates.com

Seal: PROFESSIONAL ENGINEER — Nazmi Lawen — 344 — DATE — PROVINCE OF PRINCE EDWARD ISLAND

Client: Town of Three Rivers

Project Title: Heritage Museum Washroom & Walkway
564 Main Street
Montague, PE
C0A 1R0

Sheet Title: Site Plan

Rev. No.:	Issued for:	Date: (YYYY-MM-DD)
0	Permit	2026-11-05

Scale: 1:100
Drn By: MWM
Chk By: NL
Rev. No.: 0
Project Number: 261155
Drawing Number: C100

THIS DRAWING AND ALL COPYRIGHT THEREIN ARE THE SOLE AND EXCLUSIVE PROPERTY OF COLES ASSOCIATES LTD. REPRODUCTION OR USE OF THIS DRAWING IN WHOLE OR IN PART BY ANY FORM WHATSOEVER WITHOUT THE PRIOR WRITTEN CONSENT OF COLES ASSOCIATES LTD. IS STRICTLY PROHIBITED.

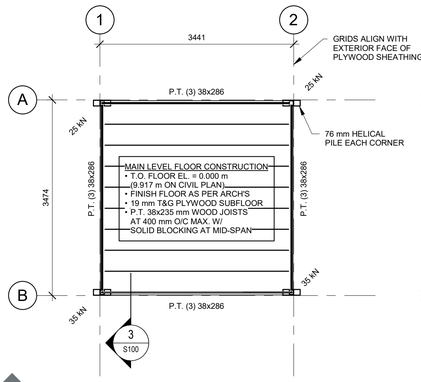

1 S100 PLAN - MAIN LEVEL FRAMING
1 : 50

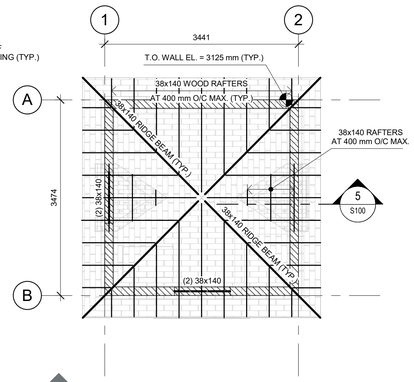

2 S100 PLAN - ROOF FRAMING
1 : 50

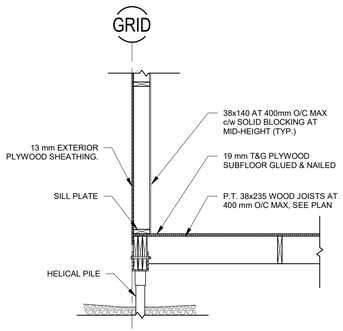

3 S100 SECTION - WOOD JOISTS BEARING ON BEAM (TYP.)
1 : 24

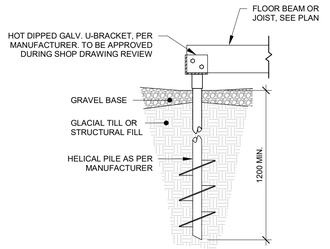

4 S100 SECTION - WOOD BEAM ON HELICAL PILE (TYP.)
1 : 24

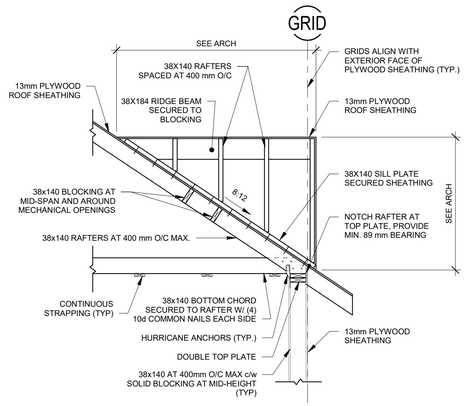

5 S100 SECTION - WOOD RAFTER & GABLE ROOF FRAMING
1 : 25

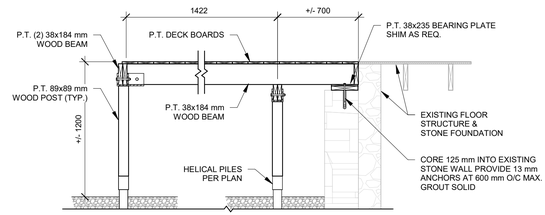

6 S100 SECTION - DECK FRAMING AT EXISTING ENTRANCE
1 : 25

FLOOR LEGEND	
	LOAD BEARING WALLS
	LINTEL ABOVE OPENING (SEE SCHEDULE)
XX	BEAMS
	WOOD JOISTS

MAIN FLOOR LOADING

FLOOR DEAD LOADS

PLYWOOD SUB-FLOOR	=	0.10 kPa	(2 psf)
FLOOR SYSTEM	=	0.12 kPa	(3 psf)
WALLS AND MISC FRAMING ABOVE	=	0.25 kPa	(5 psf)
MECH. + ELEC. ALLOWANCE	=	0.25 kPa	(5 psf)
TOTAL DEAD LOAD:	=	0.72 kPa	(15 psf)

FLOOR LIVE LOADS (SEE ARCH'S):

BALCONY	=	4.80 kPa	(100 psf)
CORRIDOR	=	4.80 kPa	(100 psf)
STORAGE	=	4.80 kPa	(100 psf)
DWELLING	=	1.90 kPa	(40 psf)
OFFICE	=	2.40 kPa	(50 psf)

LIVE LOAD DEFLECTION = L/360 MAX

NOTE:
1. ALL LOADS SPECIFIED ARE CONSIDERED UNFACTORED UNLESS NOTED OTHERWISE

ROOF LOADING

ROOF DEAD LOADS:

ROOF MEMBRANE & INSULATION	=	0.15 kPa	(3 psf)
PLYWOOD SHEATHING	=	0.10 kPa	(2 psf)
TRUSS SYSTEM	=	0.25 kPa	(5 psf)
CEILING & FINISHES	=	0.25 kPa	(5 psf)
MECH. & ELEC.	=	0.25 kPa	(5 psf)
TOTAL DEAD LOAD:	=	1.00 kPa	(20 psf)

ROOF LIVE LOADS:
SNOW LOAD = 1.0[2.7(0.8*1.0*0.53*1.0)+0.6] = 1.73 kPa (36 psf)

LIVE LOAD DEFLECTION = L/360 MAX

NOTE:
1. ALL LOADS SPECIFIED ARE CONSIDERED UNFACTORED UNLESS NOTED OTHERWISE.
2. ROOF TRUSS TO BE DESIGNED FOR NETLIFT OF 1.00 kPa (20 psf) MIN.

GENERAL NOTES

1. THE WORK SHALL BE IN ACCORDANCE WITH NATIONAL BUILDING CODE OF CANADA (NBCC), 2020 REVISION, TO THE SATISFACTION OF THE ENGINEER UNLESS NOTED OTHERWISE ON THE DRAWING OR IN THE SPECIFICATIONS.
2. COMPLY WITH ALL ENVIRONMENTAL REGULATIONS AND PROVIDE ALL NECESSARY ENVIRONMENTAL PROTECTION INCLUDING SILT FENCES, SEDIMENT TRAPS, CHECK DAMS, DUST CONTROL, ETC. DO NOT DISPOSE OF OR BURN RUBBISH ON SITE.
3. COMPLY WITH ALL LOCAL, MUNICIPAL, AND PROVINCIAL BY-LAWS AND REGULATIONS.
4. ALL WORK SHALL BE PERFORMED IN ACCORDANCE WITH PEI OCCUPATIONAL HEALTH & SAFETY ACT, WORKPLACE HAZARDOUS MATERIALS INFORMATION SYSTEM AND APPLICABLE LABOR CODES.
5. CONTRACTOR TO EXERCISE EXTREME CAUTION. DESIGN AND PROVIDE ADEQUATE SUPPORT AND CONNECTIONS TO EXISTING STRUCTURES, UTILITIES AND SERVICES. MOVE, ADJUST AND RECONNECT ALL VISIBLE AND CONCEALED ITEMS AFFECTED BY THE SCOPE OF WORK.
6. CONTRACTOR MUST VISIT THE SITE AND BE FAMILIAR WITH EXISTING CONDITIONS, VERIFY EXACT LOCATION OF ALL EXISTING UTILITIES AND SERVICES WITHIN THE CONTRACT LIMIT.
7. CONTRACTOR SHALL COORDINATE WORK AND COOPERATE WITH OWNER AND AGENCIES HAVING JURISDICTION.
8. REPORT ANY DOUBTFUL CONDITIONS REQUIRING DECISIONS AND SECURE DIRECTIONS FROM THE ENGINEER BEFORE PROCEEDING WITH THE WORK.
9. THE GENERAL CONTRACTOR-PROJECT MANAGER SHALL COORDINATE THE CIVIL, STRUCTURAL, ARCHITECTURAL, MECHANICAL, AND ELECTRICAL DRAWINGS.
10. VERIFY ALL DIMENSIONS AND REPORT ANY DISCREPANCIES TO THE ENGINEER BEFORE PROCEEDING WITH THE WORK.
11. ALL DIMENSIONS AND ELEVATIONS ARE IN METRIC UNITS UNLESS NOTED OTHERWISE.
12. ANY ADDITIONAL LOADING SHALL BE BROUGHT TO THE ATTENTION OF THE ENGINEER.
13. THE CONTRACTOR TO INCLUDE IN THE CONTRACT PRICE COSTS ASSOCIATED WITH OVER EXCAVATION, BACKFILLING AND REINSTATEMENT.
14. PROPERLY DISPOSE AND REMOVE OFFSITE ALL DEBRIS AND MATERIALS TO BE REMOVED.
15. PREVENT MOVEMENT OR SETTLEMENT, SAFEGUARD AND MAINTAIN INTEGRITY OF EXISTING AND ADJACENT STRUCTURES AND SERVICES.
16. REPAIR & REINSTATE DISTURBED ASPHALT PAVEMENT, GRASSED & LANDSCAPED AREAS, SIGNS, RETAINING WALLS, ETC., DAMAGED BY WORK OF CONTRACT INCLUDING ALL AREAS IMPACTED BEYOND LIMIT OF CONTRACT. TOPSOIL, SEED OR SOD ALL GRASSED SURFACES UNLESS NOTED OTHERWISE.
17. N.I.C. INDICATES NOT IN THIS CONTRACT.

HELICAL PILE NOTES

1. ALL SECTIONS TO BE HOT DIPPED GALVANIZED TO ASTM A123 OR CSA G164-18
2. ALL WELDING AS PER CSA 47.1 OR AWS D1.1 WELD PROCEDURES
3. STEEL SHAFT TO HAVE MIN. (55 ksi) 350 MPa YIELD STRENGTH, (80 ksi) 550 MPa TENSILE STRENGTH
4. SHAFT STEEL TO CONFORM TO ASTM A572/ASTM A53 HOT ROLLED SECTION
5. HELIX PLATES TO CONFORM TO ASTM A36, GRADE 50 STEEL
6. PILE CAP PLATE MATERIAL AS PER CSA G40.21 (300W) OR ASTM A-36
7. PROVIDE PEI PROFESSIONAL ENGINEERED STAMPED DRAWINGS OF INSTALLED WORK CONFIRMING PILE SIZE, CAPACITIES, DEPTH, CONNECTIONS, AND ANY OTHER RELEVANT DATA

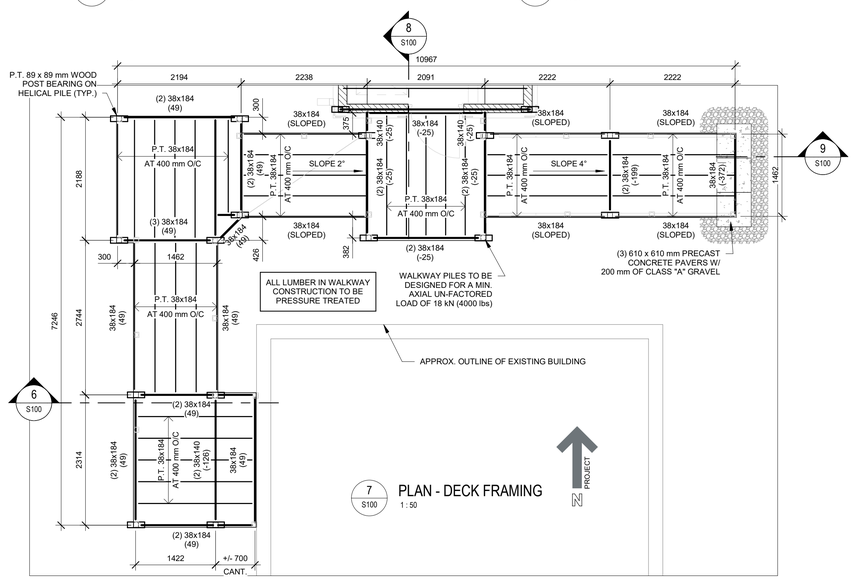

7 S100 PLAN - DECK FRAMING
1 : 50

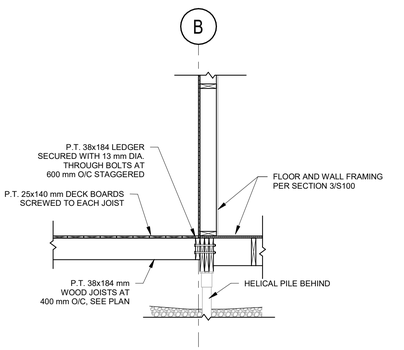

8 S100 SECTION - DECK TO MAIN FLOOR LEDGER CONNECTION
1 : 24

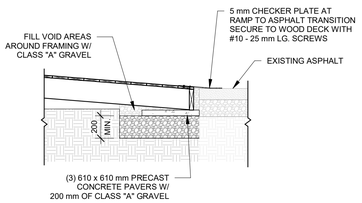

9 S100 SECTION - RAMP TO ASPHALT TRANSITION
1 : 25

ROUGH CARPENTRY NOTES

1. ALL WOOD STRUCTURAL MEMBERS, ASSEMBLIES AND FASTENERS SHALL CONFORM TO THE REQUIREMENTS OF CSA STANDARD O86 (LATEST EDITION).
2. ALL LUMBER SHALL BE IDENTIFIED BY THE GRADE MARK IN ACCORDANCE WITH THE MARKING PROVISIONS OF CSA STANDARD O141.
3. ALL LUMBER SHALL BE STRUCTURAL GRADE DRY, S-P-F NO. 2 MINIMUM, MOISTURE CONTENT NOT GREATER THAN 19% AT INSTALLATION.
4. ALL PLYWOOD SHALL BE EXTERIOR GRADE DOUGLAS FIR PLYWOOD TO CSA O121 AND MANUFACTURED WITH WATERPROOF GLUE.
5. PROVIDE FULL WIDTH 38mm (1-1/2") THICK WOOD NAILER PLATE ON FLANGES OF STEEL BEAMS AS REQUIRED. SECURE WITH 12mm (1/2") DIA. BOLTS AT 610mm (24") ON CENTER STAGGERED.
6. PROVIDE GALVANIZED METAL JOIST HANGERS WHERE JOISTS NOT SUPPORTED ON WALLS OR BEAMS. SIZE ADEQUATE TO SUPPORT DESIGN LOADS.
7. ALL FASTENERS AND METAL IN CONTACT WITH PRESSURE TREATED LUMBER SHALL BE HOT DIPPED GALVANIZED OR APPROVED EQUAL.
8. ALL BEARING SHALL BE CONTINUOUS TO FOUNDATION UNLESS NOTED OTHERWISE.
9. SHEATHING SHALL BE FASTENED AT 150mm (6") ON CENTER AT EDGES AND END SUPPORTS AND AT 300mm (12") CENTERS AT INTERMEDIATE SUPPORTS.
10. REQUIRED TRUSS/JOIST ANCHORS, CLIPS, HANGERS, ETC. SHALL BE DESIGNED AND SUPPLIED BY TRUSS/JOIST MANUFACTURER TO ACCOMMODATE ALL LOADS, INCLUDING UPLIFT.
11. VENTILATE AND FIRE STOP ALL SPACES TO NBCC REQUIREMENTS.

COLES
Architecture + Engineering + Project Management

Coles Associates Ltd.
Suite 201, 85 Fitzroy Street
Charlottetown, PE, Canada, C1A 1R6
Phone: (902) 368-2300
www.colesassociates.com

2020-11-04 3:51:40 PM

Seal: PROFESSIONAL ENGINEER — Nazmi Lawen 344 — PROVINCE OF PRINCE EDWARD ISLAND

Client: Town of Three Rivers

Project Title: Heritage Museum Washroom & Walkway

564 Main St
Montague, PE
C0A 1R0

Sheet Title: Structural Plans, Details, & Notes

Rev. No.:	Issued for:	Date: (YYYY-MM-DD)
0	Permit	2026-11-05

Scale: As indicated
Dm By: TLL
Chk By: NL P.Eng
Rev. No.: 0
Project Number: 261155
Drawing Number: S100

THIS DRAWING AND ALL COPYRIGHT THEREIN ARE THE SOLE AND EXCLUSIVE PROPERTY OF COLES ASSOCIATES LTD. REPRODUCTION OR USE OF THIS DRAWING IN WHOLE OR IN PART BY ANY FORM WHATSOEVER WITHOUT THE PRIOR WRITTEN CONSENT OF COLES ASSOCIATES LTD. IS STRICTLY PROHIBITED.



1 / A001 CONTEXT PLAN
NTS



GENERAL NOTES

1. VERIFY ALL DIMENSIONS AND REPORT ANY DISCREPANCIES TO THE CONSULTANT BEFORE PROCEEDING WITH THE WORK.
2. THE WORK SHALL BE IN ACCORDANCE WITH THE NATIONAL BUILDING CODE OF CANADA (NBCC 2020).
3. THE WORK SHALL BE IN ACCORDANCE WITH ACCESSIBLE DESIGN FOR THE BUILT ENVIRONMENT CSA B651:23.
4. COMPLY WITH ALL LOCAL, MUNICIPAL AND PROVINCIAL BY-LAWS AND REGULATIONS.
5. CONTRACTOR TO VERIFY LOCATION OF ALL UTILITIES PRIOR TO EXCAVATION.
6. BENCH MARKS TO BE ESTABLISHED BY CONTRACTOR.
7. ALL WOOD FRAMING TO BE CONSTRUCTED OF APPROVED MATERIALS AND LATERALLY STRAPPED AND SUPPORTED PER NBCC 2020 STRUCTURAL REQUIREMENTS.
8. VENT ALL WASHROOM FANS TO OUTSIDE AIR. PROVIDE WEATHERPROOF VENT.
9. ALL WALL DIMENSIONS ARE TO FINISH FACE OF GYPSUM WALL BOARD UNLESS NOTED OTHERWISE.
10. PROVIDE 5/8" / 16mm MOISTURE RESISTANT GYPSUM WALL BOARD.
11. PROVIDE CORNER GUARDS AT ALL OUTSIDE CORNERS OF GWB WALLS
12. PERIMETER GRID LINES ARE TO FACE OF SHEATHING UNLESS NOTED OTHERWISE.
13. ALL OTHER DISCIPLINES SHOWN FOR GENERAL INTENT ONLY. REFER TO CORRESPONDING DRAWINGS.
14. STUD SPACING ON STRUCTURAL DRAWINGS OVERRIDES THE ARCHITECTURAL STUD SPACING.
15. REFER TO MATERIAL / FINISH SCHEDULE ON THE OUTLINE SPECIFICATION SHEET FOR INFO ON ALL MATERIAL TAGS.
16. REFER TO SCHEDULE FOR ALL WASHROOM ACCESSORY MOUNTING HEIGHTS AND DISTANCES.
17. THE ATTIC OR ROOF SPACE ACCESS HATCH IS TO BE A FIRE RATED CLOSURE. CLEAR OPENING TO BE MIN. 550mm x 900mm.
18. RAMP CONSTRUCTION:
    A. ALL LUMBER SHALL BE PRESSURE TREATED
    B. SURFACE SHALL HAVE ANTI-SLIP SURFACE
    C. RAMP SLOPE SHALL BE MAX. 1:12 SLOPE
19. CEDAR SHINGLE SIDING SHALL HAVE 5" / 125 mm EXPOSURE.
20. REFER TO EXTERIOR ELEVATIONS FOR DOWNSPOUT LOCATIONS
21. REFER TO ELECTRICAL AND MECHANICAL PLANS FOR CEILING LOCATIONS OF LIGHTING AND EQUIPMENT

PROJECT INFORMATION

ADDRESS: 564 MAIN ST., MONTAGUE, PE, C0A 1R0
MUNICIPALITY: TOWN OF THREE RIVERS
AUTHORITY HAVING JURISDICTION (DP):
AUTHORITY HAVING JURISDICTION (BP):
PID#: 196519
ZONING: TYPE 14 COMMERCIAL
GROSS AREAS:
LEVEL 1: 9.75 m²
SUB-TOTAL (NEW): XX
TOTAL: XX
SETBACKS:
MINIMUM LOT AREA: XX SQFT / XX SQM
MINIMUM FRONTAGE: XX FT
MINIMUM FRONT YARD: XX FT
MINIMUM REAR YARD: XX FT
MINIMUM SIDE YARD: XX FT
MINIMUM FLANKAGE YARD: XX FT
MAXIMUM LOT COVERAGE: XX%
MAX. HEIGHT: (provide a definition of how it is calculated)

DOOR & FRAME SCHEDULE

			DOOR					FRAME			HARDWARE				FUNCTION													
DOOR NO.	ROOM NAME	TYPE	WIDTH	HEIGHT	THICKNESS	MATERIAL	FINISH	TYPE	MATERIAL	FINISH	LOCKSET, LEVER HANDLE, CYLINDRICAL	LOCKSET, LEVER HANDLE, MORTISE	DEADLATCH w/MORTISE CYLINDER & PADDLE	FUNCTION - STORE ROOM	FUNCTION - ENTRANCE	CLOSER	DOOR STOP - WALL	DOOR STOP - OVERHEAD	HINGES - BUTT	KICK PLATE - PUSH SIDE - 300 HIGH	THRESHOLD	THRESHOLD - THERMALLY BROKEN	DOOR SWEEP	WEATHER STRIPPING	FLUSH BOLTS	MOTORIZED DOOR OPERATOR w/TWO ACTUATORS	ELECTRIC STRIKE	COMMENTS
100.1	B.F. WASHROOM	D1	965	2110	44	HMI	FACTORY WOOD GRAIN FINISH	F1	MT	EXT. PT-3 INT. PT-2					X		X		X				X	X			X	Power door operators & keypad access
101.1	CLOSET	D2	610	2134	44	WD	PT-2	F1	WD	PT-2	X			X			X		X									

DOOR AND FRAME SCHEDULE NOTES

1. REFER TO MATERIAL/FINISH SCHEDULE FOR INFO ON ALL MATERIAL TAGS.
2. REFER TO SPECIFICATION FOR DOOR HARDWARE GROUPS. HARDWARE NOTED IN HARDWARE GROUPS OVERRIDE ITEMS NOTED ON THE DOOR SCHEDULE.
3. ALL DOORS TO HAVE A WALL STOP. IF NO WALL, PROVIDE AN OVERHEAD STOP.
4. ALL DOORS ARE HOLLOW METAL UNLESS NOTED OTHERWISE.
5. ALL EXTERIOR DOORS AND FRAMES TO BE INSULATED.
6. ALL EXTERIOR DOOR FRAMES AND THRESHOLDS TO BE THERMALLY BROKEN.
7. THRESHOLDS TO BE MAX. 12mm HIGH.
8. ALL FRAMES ARE PRESSED STEEL UNLESS NOTED OTHERWISE.
9. ALL FRAMES TO BE F1 UNLESS NOTED OTHERWISE.
10. ALL PRESSED STEEL FRAMES TO OVERLAP GWB.

DOOR AND FRAME SCHEDULE ABBREVIATIONS

AL	ALUMINUM
HMI	HOLLOW METAL INSULATED
WD	WOOD

WINDOW TYPE NOTES

1. ALL WINDOWS ARE DIMENSIONED TO THE ROUGH OPENINGS.

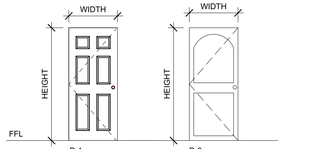

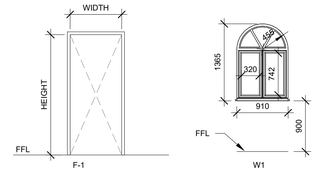

LEGEND

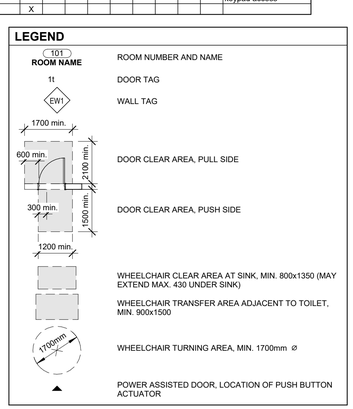

BUILDING CODE ANALYSIS

1. BUILDING DEFINITION
1. Governing Code: National Building Code (NBC) 2020
2. Building Height: 1 storey
3. *Building Area*: 13.2 m² / 142 sqft
4. Major Occupancies: 9.10.2.1.
    1. Group A2
5. Subsidiary Occupancies: N/a
6. Article of Construction: Part 9 Building
    1. Construction Type:
        1. Code: Permitted to be of combustible construction.
        2. Provided: Combustible construction.
    2. Floor Assemblies:
        2. Code: 9.10.8.10. No fire-resistance rating is required.
    3. Roof Assembly:
        1. Code: 9.10.8.1. No fire-resistance rating is required. See below for separation of unit requirements and fire blocking.
    4. Mezzanine:
        1. Code: N/a
        2. Provided: N/a
    5. Load Bearing Walls, Columns and Arches:
        1. Code: 9.10.8.3. Shall have a fire-resistance rating not less than that required for the supported assembly.
7. Fire Walls: N/a
8. Party Walls: N/a
9. Interconnected floor space: N/a

2. EXITS
1. Criteria for one exit: 9.9.7.4.
    1. Code: One exit is required.
    2. Provided: One exit.:

3. BUILDING LIFE SAFETY SYSTEMS
1. Sprinkler
    1. Code: N/a
    2. Provided: N/a
2. Exit Signs: 9.9.11.3.
    1. Code: N/a
    2. Provided: N/a

4. FIRE SEPARATIONS (MINIMUM)

1.	Major Occupancy Separation		N/a
2.	Fire walls	9.10.11	N/a
3.	Party Walls	9.10.11.2.	N/a
4.	Storage Garage		N/a
5.	Separation of Suites	9.10.9.16.	N/a
6.	Public Corridors	9.10.9.17.	N/a
7.	Janitor rooms		N/a
8.	Contained use area		N/a
9.	Storage rooms	9.10.10.6.	N/a
10.	Repair Garage	9.10.9.19	N/a
11.	Storage Garage	9.10.9.18.	N/a
12.	Storage Garage Vestibules		N/a
13.	Exits		N/a
14.	Elevator shaft and machine room		N/a
15.	Service rooms	9.10.10.3.	N/a
16.	Vertical Service Spaces		N/a

EXTERIOR WALL TYPES

TAG	DESCRIPTION	RATING	DESIGN NO.:
EW1	- CLADDING (REFER TO ELEVATIONS) - 1" / 25mm RIGID INSULATION (R5) - CONTINUOUS AIR BARRIER (TAPED & STAPLED) - 1/2" / 12mm EXTERIOR PLYWOOD SHEATHING - 1 1/2" x 5 1/2" / 38mm x 140mm WOOD STUD FRAMING @ 16" / 400mm O.C. c/w BATT INSULATION (R22) - 6mil POLY VAPOUR BARRIER (TAPED & SEALED) - 1 LAYER, 5/8" / 16 mm MOISTURE RESISTANT GYPSUM WALL BOARD -REFER TO FINISH PLANS FOR INTERIOR FINISH		
EW2	- WOOD CEDAR SHINGLES, 5" / 125mm EXPOSURE - 1" / 25mm RIGID INSULATION (R5) - CONTINUOUS AIR BARRIER (TAPED & SEALED) - 1/2" / 12mm EXTERIOR PLYWOOD SHEATHING - 1 1/2" x 5 1/2" / 38mm x 140mm WOOD STUD FRAMING @ 16" / 400mm O.C. c/w BATT INSULATION (R22) - 6mil POLY VAPOUR BARRIER (TAPED & SEALED) -3/4" x 3 1/2" / 19 mm x 89 mm WOOD STRAPPING		

ROOF TYPES

TAG	DESCRIPTION	RATING	DESIGN NO.:
R1	-ASPHALT ROOFING SHINGLES -CONTINUOUS HIGH TEMPERATURE MEMBRANE (SELF-ADHESIVE) -1/2" / 12 mm PLYWOOD/OSB SHEATHING c/w 'H-CLIPS' -1 1/2" x 5 1/2" / 38 mm x 140 mm WOOD RAFTERS @ 16" / 400 mm o.c. c/w FIBERGLASS BATT INSULATION (FILL CAVITY) -6MIL POLY VAPOUR BARRIER (TAPED AND SEALED) -3/4" x 3 1/2" / 19 mm x 89 mm WOOD STRAPPING @ 24" / 610 mm o.c. -5/8" / 16 mm MOISTURE RESISTANT GYPSUM WALL BOARD		
R2	-ASPHALT ROOFING SHINGLES -CONTINUOUS HIGH TEMPERATURE MEMBRANE (SELF-ADHESIVE) -1/2" / 12 mm PLYWOOD/OSB SHEATHING c/w 'H-CLIPS' -1 1/2" x 3 1/2" / 38 mm x 90 mm WOOD RAFTERS @ 16" / 400mm o.c.		

FLOOR TYPES

TAG	DESCRIPTION	IIC	STC	RATING	DESIGN NO.:
F1	-FLOOR FINISH AS SCHEDULED -3/4" / 19 mm T & G PLYWOOD -1 1/2" x 7 1/4" / 38 mm x 235 mm P.T. FLOOR JOISTS @ 16" / 400 mm o.c. c/w BLOCKING -4" / 102 mm SPRAY FOAM IN ALL CAVITIES				

WOOD STUD WALL TYPES

TAG	DESCRIPTION	STC	RATING	DESIGN NO.:
W1	- 1 LAYER, 5/8" / 16mm GYPSUM WALL BOARD - 1 1/2" x 5 1/2" / 38mm x 140mm WOOD STUD FRAMING @ 16" / 400mm O.C. - 1 LAYER, 5/8" / 16mm GYPSUM WALL BOARD	36		NBC 2020, W1a
WF1	- 1 LAYER, 5/8" / 16mm GYPSUM WALL BOARD - 1 1/2" x 3 1/2" / 38mm x 89mm WOOD STUD FRAMING @ 16" / 400mm O.C. - ADJACENT WALL OR STRUCTURE			

BARRIER FREE WASHROOM NOTES

1. A CLEAR FLOOR AREA OF 1700 x 1700mm (67" x 67") SHALL BE PROVIDED AT THE DOOR AND WITHIN A BARRIER FREE WASHROOM.
2. A CLEAR TRANSFER SPACE 900 x 1500mm (36" x 60") SHALL BE PROVIDED BESIDE THE TOILET (MEASURED FROM THE RIM).
3. THE FLUSH VALVE OF A TOILET SHALL BE LOCATED ON THE TRANSFER SIDE.
4. LAVATORIES SHALL HAVE A CLEAR FLOOR AREA 800 x 1350mm (31" x 53") CENTERED ON THE LAVATORY, OF WHICH NOT MORE THAN 430mm (16") MAY BE UNDER THE LAVATORY.
5. TOWEL DISPENSER/HAND DRYER AND SOAP DISPENSER SHALL BE LOCATED WITHIN A 500mm (19") REACH OF A PERSON SEATED AT THE LAVATORY.
6. ALL ACCESSORIES SHALL BE MOUNTED TO WOOD BLOCKING THAT'S INSTALLED PRIOR TO GYPSUM WALL BOARD INSTALLATION.
7. THE DOOR SHALL HAVE A LOCKING MECHANISM CAPABLE OF BEING UNLOCKED FROM THE OUTSIDE.

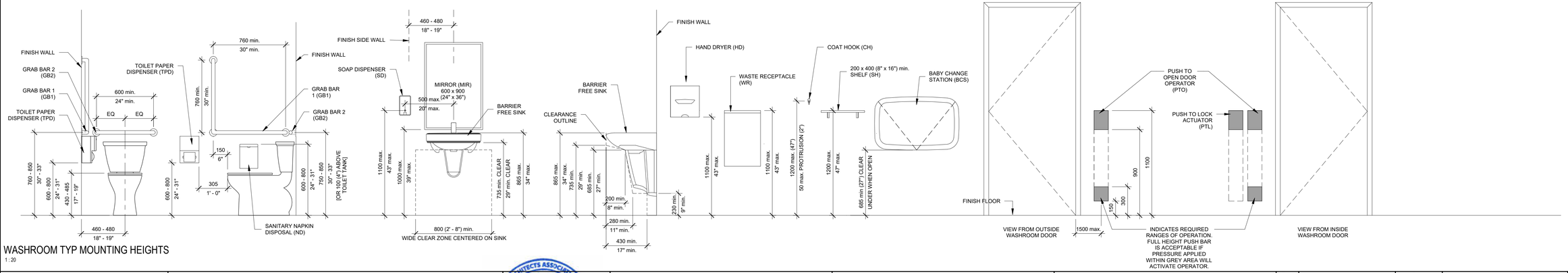

WASHROOM TYP MOUNTING HEIGHTS
1 : 20

COLES
Architecture + Engineering + Project Management
Coles Associates Ltd.
Suite 201, 85 Fitzroy Street
Charlottetown, PE, Canada, C1A 1R6
Phone: (902) 368-2300
www.colesassociates.com

2026-11-05 3:20:14 PM

Seal: ENGINEERS & GEOSCIENTISTS ASSOCIATION 19-12 CERTIFICATE of PRACTICE Scott Daniel MacNeill Coles Associates Ltd. AAPEI OF PRINCE EDWARD ISLAND #261155 / EP / Nov 5, 2026

Client: Town of Three Rivers

Project Title: Heritage Museum Washroom & Walkway
564 Main St.
Montague, PE
C0A 1R0

Sheet Title: Project Information, Code Analysis, Notes & Schedules

Rev. No.:	Issued for:	Date: (YYYY-MM-DD)
0	Permit	2026-11-05

Scale: As indicated
Drn By: JIS
Chk By: SDM
Rev. No.: 0
Project Number: 261155
Drawing Number: A001

THIS DRAWING AND ALL COPYRIGHT THEREIN ARE THE SOLE AND EXCLUSIVE PROPERTY OF COLES ASSOCIATES LTD. REPRODUCTION OR USE OF THIS DRAWING IN WHOLE OR IN PART BY ANY FORM WHATSOEVER WITHOUT THE PRIOR WRITTEN CONSENT OF COLES ASSOCIATES LTD. IS STRICTLY PROHIBITED.

1. **ARCHITECTURAL**

1.1. MATERIAL / FINISH SCHEDULE

1.1.1. REFER TO THE DRAWINGS FOR THE MATERIAL / FINISH SCHEDULE.

1.2. ACCESSORIES SCHEDULE

1.2.1. REFER TO THE DRAWINGS FOR THE ACCESSORIES SCHEDULE.

1.3. SECTION 06 10 00 ROUGH CARPENTRY

1.3.1 GENERAL

1.3.1.1. PROVIDE SHOP DRAWINGS / SUBMITTALS FOR REVIEW PRIOR TO ORDERING MATERIALS. ENGINEERED SHOP DRAWINGS ARE REQUIRED AND ARE TO BE SIGNED AND SEALED BY AN ENGINEER REGISTERED IN PE.

1.3.2. PRODUCTS

1.3.2.1. LUMBER

1.3.2.1.1. UNLESS SPECIFIED OTHERWISE, SOFTWOOD, S4S, MOISTURE CONTENT 19% (S-DRY) OR LESS IN ACCORDANCE WITH THE FOLLOWING STANDARDS:

1.3.2.1.2. CAN/CSA-O141

1.3.2.1.3. NLGA STANDARD GRADING RULES FOR CANADIAN LUMBER

1.3.2.2. GLUED END-JOINTED (FINGER-JOINTED) LUMBER ARE NOT ACCEPTABLE.

1.3.2.3. FRAMING AND BOARD LUMBER: IN ACCORDANCE WITH NBC 2020

1.3.2.4. FURRING, BLOCKING, NAILING STRIPS, GROUNDS, ROUGH BUCKS, CANTS, CURBS, FASCIA BACKING AND SLEEPERS:

1.3.2.4.1. S4S IS ACCEPTABLE

1.3.2.4.2. BOARD SIZES: "STANDARD" OR BETTER GRADE

1.3.2.4.3. DIMENSION SIZES: "STANDARD" LIGHT FRAMING OR BETTER GRADE

1.3.2.5. POST AND TIMBERS SIZES: "STANDARD" OR BETTER GRADE.

1.3.2.6. DOUGLAS FIR PLYWOOD (DFP): TO CSA O121, STANDARD CONSTRUCTION.

1.3.2.7. STAIRS AND LANDINGS:

1.3.2.7.1. FRAMING MATERIAL: ALL PRESSURE TREATED LUMBER

1.3.2.7.2. FINISH: NO PAINT OR STAIN

1.3.3. EXECUTION

1.3.3.1. PROVIDE ROUGH CARPENTRY, BLOCKING, CURBS AS REQUIRED

1.3.3.2. PROVIDE FIRE TREATED PLYWOOD MOUNTING BOARDS FOR ELECTRICAL EQUIPMENT.

1.3.3.3. WOOD IN CONTACT WITH MASONRY OR CONCRETE, OR AT EXTERIOR LOCATIONS SHALL BE PRESSURE PRESERVATIVE TREATED.

1.4. SECTION 06 41 00 ARCHITECTURAL WOOD CASEWORK

1.4.1. GENERAL

1.4.1.1. PROVIDE SHOP DRAWINGS / SUBMITTALS FOR REVIEW PRIOR TO ORDERING MATERIALS.

1.4.1.2. FABRICATE CASEWORK TO AWMAC CUSTOM GRADE.

1.4.2. PRODUCTS

1.4.2.1. CASEWORK:

1.4.2.1.1. FRAMING:

1.4.2.1.2. THERMOFUSED LAMINATE PANEL, THICKNESS AS REQUIRED.

1.4.2.1.3. FURRING, BLOCKING, NAILING STRIPS, GROUNDS AND ROUGH BUCKS AND SLEEPERS:

1.4.2.1.4. HARDWOOD PLYWOOD, THICKNESS AS REQUIRED.

1.4.2.1.5. CASE BODIES (ENDS, DIVISIONS, GABLES AND BOTTOMS, INCLUDING BASE, UPPERS AND WALL CABINETS):

1.4.2.1.6. THERMOFUSED LAMINATE PANEL, GRADE R, 19 MM THICK.

1.4.2.1.7. EDGE BANDING: HEAVY DUTY 3 MM PVC, COLOR AND FINISH TO MATCH TOP SURFACE, STRIP SAME WIDTH AS MATERIAL.

1.4.2.1.8. BACKS: COMPOSITE PANEL (THERMOFUSED LAMINATE PANEL)

1.4.2.1.9. CORE: MEDIUM DENSITY M3 PARTICLEBOARD.

1.4.2.1.10. THICKNESS 13 MM.

1.4.2.1.11. SHELVING (ADJUSTABLE, FIXED TOP AND BOTTOM) (THERMOFUSED LAMINATE PANEL):

1.4.2.1.12. THERMOFUSED LAMINATE PANEL, GRADE R, 19 MM THICK.

1.4.2.1.13. USE RECESSED STANDARDS TO SUPPORT SHELVES.

1.4.2.1.14. EDGE BANDING (ALL EDGES): HEAVY DUTY 3 MM PVC, COLOR AND FINISH TO MATCH TOP SURFACE, SAME WIDTH AS MATERIAL.

1.4.2.1.15. FORM SHELVING:

1.4.2.1.16. PLASTIC LAMINATE, STANDARD DUTY GRADE, 16 MM THICK.

1.4.2.1.17. TWO LAYERS ADHERED BACK-TO-BACK FOR SPANS UP TO 915 MM.

1.4.2.1.18. THREE LAYERS ADHERED BACK-TO-BACK FOR SPANS OVER 915 MM.

1.4.2.2. DOORS AND DRAWER FRONTS: FABRICATE DOORS TO AWMAC CUSTOM GRADE, FULL OVERLAYS, SUPPLEMENTED AS FOLLOWS:

1.4.2.2.1. CORE: PARTICLE BOARD, GRADE R, 19 MM THICK.

1.4.2.2.2. LAMINATED PLASTIC: STANDARD GRADE, 1.15 MM THICK.

1.4.2.2.3. EDGE BANDING (ALL EDGES): HEAVY DUTY (3 MM) PVC, COLOR AND FINISH TO MATCH FACE SURFACE, SAME WIDTH AS DOOR.

1.4.2.2.4. HINGES: CONCEALED, 170° OPENING, SELF-CLOSING, LOW PROFILE.

1.4.2.2.5. LOCKS: AS SCHEDULED ON DRAWINGS

1.4.3. EXECUTION

1.4.3.1. PROVIDE BLOCKING AS REQUIRED.

1.5. SECTION 05 52 00 METAL RAILINGS

1.5.1. GENERAL

1.5.1.1. PROVIDE SHOP DRAWINGS / SUBMITTALS FOR REVIEW PRIOR TO ORDERING MATERIALS. ENGINEERED SHOP DRAWINGS ARE REQUIRED AND ARE TO BE SIGNED AND SEALED BY AN ENGINEER REGISTERED IN PE.

1.5.1.2. DESIGN, FABRICATE, AND TEST RAILING ASSEMBLIES IN ACCORDANCE WITH THE MOST STRINGENT REQUIREMENTS OF CSA S16, ASTM E985 AND APPLICABLE BUILDING CODE.

1.5.1.3. ALLOW FOR EXPANSION AND CONTRACTION OF MEMBERS AND BUILDING MOVEMENT WITHOUT DAMAGE TO CONNECTIONS OR MEMBERS.

1.5.2. PRODUCTS

1.5.2.1. FABRICATED STEEL

1.5.2.1.1. STEEL PIPE SHALL BE AS DETAILED, AND SHALL BE OF STANDARD WEIGHT (SCHEDULE 40) STEEL PIPE CONFORMING TO ASTM A53, TYPE E OR S, GRADE B.

1.5.2.2. FINISHES:

1.5.2.2.1. PAINTED STEEL

1.5.2.3. HANDRAIL DIMENSIONS:

1.5.2.3.1. HANDRAIL: MAX 43 MM DIAMETER, ROUND.

1.5.2.3.2. STEEL PIPE HANDRAILS SHALL BE AS DETAILED, AND SHALL BE OF STANDARD WEIGHT (SCHEDULE 40) STEEL PIPE CONFORMING TO ASTM A53, TYPE E OR S, GRADE B.

1.5.3. EXECUTION

1.5.3.1. INSTALL PER MANUFACTURERS INSTRUCTIONS AND REQUIREMENTS.

1.6. SECTIONS 07 21 13 BOARD INSULATION

1.6.1. GENERAL

1.6.1.1. PROVIDE SUBMITTALS FOR REVIEW PRIOR TO ORDERING MATERIALS.

1.6.2. PRODUCTS

1.6.2.1. STANDARD OF ACCEPTANCE:

1.6.2.1.1. IKO ENERGY AIR, POLYISOCYANURATE

1.6.2.1.2. LOCATION: EXTERIOR WALLS

1.6.2.1.3. THICKNESS & R-VALUE PER ASSEMBLIES

1.6.2.1.4. COMPRESSIVE STRENGTH: 16 PSI MIN

1.6.3 EXECUTION

1.6.3.1. INSTALL PER MANUFACTURERS INSTRUCTIONS AND REQUIREMENTS.

1.6.3.2. PROVIDE INSULATION AS INDICATED THROUGHOUT DRAWINGS.

1.7. SECTION 07 21 16 BLANKET INSULATION

1.7.1. GENERAL

1.7.1.1. PROVIDE SUBMITTALS FOR REVIEW PRIOR TO ORDERING MATERIALS.

1.7.2. PRODUCTS

1.7.2.1. STANDARD OF ACCEPTANCE:

1.7.2.1.1. OWENS CORNING, FIBERGLASS

1.7.2.2. THICKNESS & R-VALUE PER ASSEMBLIES

1.7.3. EXECUTION

1.7.3.1. INSTALL PER MANUFACTURERS INSTRUCTIONS AND REQUIREMENTS.

1.7.3.2. PROVIDE INSULATION AS INDICATED THROUGHOUT DRAWINGS.

1.8. SECTION 07 21 26 BLOWN INSULATION

1.8.1. GENERAL

1.8.1.1. PROVIDE SUBMITTALS FOR REVIEW PRIOR TO ORDERING MATERIALS.

1.8.2. PRODUCTS

1.8.2.1. STANDARD OF ACCEPTANCE:

1.8.2.1.1 OWENS CORNING, ATTICAT, EXPANDING BLOWN-IN PINK FIBERGLAS INSULATION

1.8.2.1.2. LOCATION: ATTIC

1.8.2.2 THICKNESS & R-VALUE PER ASSEMBLIES

1.8.3. EXECUTION

1.8.3.1. INSTALL PER MANUFACTURERS INSTRUCTIONS AND REQUIREMENTS.

1.8.3.1.2. PROVIDE INSULATION AS INDICATED THROUGHOUT DRAWINGS.

1.9. SECTION 07 21 19 FOAMED IN PLACE INSULATION

1.9.1. GENERAL

1.9.1.1. PROVIDE SUBMITTALS FOR REVIEW PRIOR TO ORDERING MATERIALS.

1.9.2. PRODUCTS

1.9.2.1. STANDARD OF ACCEPTANCE:

1.9.2.1.1. GENYK, BOREAL NATURE, TYPE 2

1.9.2.1.2. ELASTOCHEM, INSULTHANE EXTREME CCSPF, DENSITY 2.2 LB/FT3

1.9.2.2. THICKNESS & R-VALUE PER ASSEMBLIES (MIN. R6 PER INCH)

1.9.3. EXECUTION

1.9.3.1. INSTALL PER MANUFACTURERS INSTRUCTIONS AND REQUIREMENTS.

1.10. SECTION 07 26 00 VAPOUR RETARDERS

1.10.1. GENERAL

1.10.1.1. PROVIDE SUBMITTALS FOR REVIEW PRIOR TO ORDERING MATERIALS.

1.10.2. PRODUCTS

1.10.2.1. SHEET

1.10.2.1.1. STANDARD OF ACCEPTANCE:

1.10.2.1.1.1. POLYETHYLENE SHEET 6 MIL TO BE USED ON ALL WALLS AND CEILINGS AS APPLICABLE.

1.10.2.2 SELF ADHESIVE

1.10.2.2.1. STANDARD OF ACCEPTANCE:

1.10.2.2.1.1. HENRY, BLUESKIN SA

1.10.2.2.1.2. SOPREMA, SOPRASEAL STICK 1100 T

1.10.3. EXECUTION

1.10.3.1. INSTALL PER MANUFACTURERS INSTRUCTIONS AND REQUIREMENTS.

1.10.3.2. LOCATE ON WARM SIDE OF INSULATION IN ALL CASES.

1.11. SECTION 07 27 00 AIR BARRIERS

1.11.1. GENERAL

1.11.1.1. PROVIDE SUBMITTALS FOR REVIEW PRIOR TO ORDERING MATERIALS.

1.11.2. PRODUCTS

1.11.2.1. AIR BARRIER MEMBRANE (SELF-ADHERING), AROUND WINDOWS AND DOORS.

1.11.2.1.1. SELF-ADHESIVE WITH PRIMER.

1.11.2.1.2. PRIMER: TYPE RECOMMENDED BY MANUFACTURER.

1.11.2.1.3. FOR INSTALLATION ON CONCRETE AND SHEATHING.

1.11.2.1.4. STANDARD OF ACCEPTANCE:

1.11.2.1.4.1. 3M, FLASHING TAPE 8067, 150 MM WIDE

1.11.2.2. AIR BARRIER MEMBRANE (STAPLED)

1.11.2.2.1. STANDARD OF ACCEPTANCE:

1.11.2.2.2. TYVEK, SPUN BONDED OLEFIN SHEET, TAPED JOINTS

1.11.3. EXECUTION

1.11.3.1. INSTALL PER MANUFACTURERS INSTRUCTIONS AND REQUIREMENTS.

1.12. SECTION 07 31 13 ASPHALT SHINGLES

1.12.1 GENERAL

1.12.1.1 PROVIDE SUBMITTALS FOR REVIEW PRIOR TO ORDERING MATERIALS.

1.12.2. PRODUCTS

1.12.2.1 ASPHALT SHINGLES:

1.12.2.1.1. STANDARD OF ACCEPTANCE:

1.12.2.1.1.1. IKO CAMBRIDGE ARCHITECTURAL SHINGLES

1.12.2.1.1.2. COLOUR: DUAL GREY

1.12.2.1.2. EAVE/VALLEY PROTECTION:

1.12.2.1.2.1. STANDARD OF ACCEPTANCE:

1.12.2.1.2.1.1. GRACE, VYCOR SELECT

1.12.2.1.3. UNDERLAYMENT:

1.12.2.1.3.1. STANDARD OF ACCEPTANCE:

1.12.2.1.3.1.1. CERTAINTEED ROOF RUNNER AIR. SYNTHETIC ROOF UNDERLAYMENT.

1.12.2.1.4. DRIP EDGE: PREFINISHED METAL

1.12.2.1.5. SPOT SEAL ALL SHINGLES

1.12.3. EXECUTION

1.12.3.1. INSTALL PER MANUFACTURERS INSTRUCTIONS AND REQUIREMENTS.

1.13. SECTION 07 46 24 WOOD SHINGLE SIDING

1.13.1. GENERAL

1.13.1.1. PROVIDE SUBMITTALS FOR REVIEW PRIOR TO ORDERING MATERIALS.

1.13.1.2. PROVIDE A MOCK-UP OF SHINGLES AND ALL TRIMS. MOCK-UP MAY REMAIN AS PART OF THE PROJECT.

1.13.2. PRODUCTS

1.13.2.1. STANDARD OF ACCEPTANCE:

1.13.2.1.1. CANUSA

1.13.2.1.2. WASKA

1.13.2.2. GRADE: CLEAR GRADE B, CLEAR FACE WITH SOME KNOTS AND DEFECTS IN THE UPPER 6 " OF THE SHINGLE.

1.13.2.2.1. SPECIES: CEDAR

1.13.2.2.2. COLOUR: REFER TO MATERIAL / FINISH SCHEDULE.

1.13.3. EXECUTION

1.13.3.1. INSTALL PER MANUFACTURERS INSTRUCTIONS AND REQUIREMENTS

1.14. SECTION 04 73 00 MANUFACTURED STONE VENEER SIDING

1.14.1. GENERAL

1.14.1.1. PROVIDE SUBMITTALS FOR REVIEW PRIOR TO ORDERING MATERIALS

1.14.2. PRODUCTS

1.14.2.1. STANDARD OF ACCEPTANCE:

1.14.2.1.1. EVOLVE STONE MORTARLESS VENEER

1.14.2.1.2. STYLE: GEORGETOWN RUN

1.14.2.1.3. COLOUR: KODIAK MINE

1.14.2.2. MECHANICAL FASTENERS

1.14.2.2.1. STAINLESS STEEL FINISH NAILS

1.14.2.2.2. 16-GAUGE WITH A FASTENER LENGTH LONG ENOUGH TO PENETRATE THROUGH THE BACKSIDE OF THE SHEATHING SUBSTATE BY ¼ ".

1.14.2.2.3. SCREWS

1.14.2.2.3.1. SELF TAPPING STAINLESS STEEL OR CORROSION RESISTANT TRIM HEAD SCREW LONG ENOUGH TO FIRML GRIP INTO BLOCKING WHERE APPLICABLE

1.14.2.3. EXTERIOR SUBSTRATE MATERIAL

1.14.2.3.1. WOODEN SUBSTRATE

1.14.2.3.1.1. MINIMUM 7/16" THICK SHEATHING OF OSB OR PLYWOOD TO ALLOW FOR MECHANICAL FASTENERS

1.14.3. EXECUTION

1.14.3.1. INSTALL PER MANUFACTURERS INSTRUCTIONS AND REQUIREMENTS

1.15. SECTION 07 62 00 SHEET METAL FLASHING AND TRIM

1.15.1. GENERAL

1.15.1.1. PROVIDE SUBMITTALS FOR REVIEW PRIOR TO ORDERING MATERIALS

1.15.2. PRODUCTS

1.15.2.1. STANDARD OF ACCEPTANCE:

1.15.2.1.1. VICWEST

1.15.2.2. PREFINISHED METAL, 26 GAUGE

1.15.2.3. FLASHINGS AND TRIMS.

1.15.2.4. GUTTERS: PRE-FINISHED SHEET STEEL, PREFORMED BY SEAMLESS PROCESS C/W ALL ACCESSORIES.

1.15.2.5. DOWNSPOUTS: PRE-FINISHED SHEET STEEL, PREFORMED BY SEAMLESS PROCESS C/W ALL ACCESSORIES

1.15.2.6. COLOUR: REFER TO MATERIAL / FINISH SCHEDULE.

1.15.3. EXECUTION

1.15.3.1. INSTALL PER MANUFACTURERS INSTRUCTIONS AND REQUIREMENTS.

1.16. SECTION 07 92 00 JOINT SEALANTS

1.16.1. GENERAL

1.16.1.1. PROVIDE SUBMITTALS FOR REVIEW PRIOR TO ORDERING MATERIALS

1.16.1.2. PROVIDE A MOCK-UP. MOCK-UP MAY REMAIN AS PART OF THE PROJECT.

1.16.2. PRODUCTS

1.16.2.1. STANDARD OF ACCEPTANCE:

1.16.2.1.1. PURPOSE MADE FOR SPECIFIC APPLICATION

1.16.2.2. CAULK AND SEAL BUILDING AS REQUIRED TO MAKE IT WATER AND WEATHER TIGHT TO THE EXTERIOR, INCLUDING BUT NOT LIMITED TO MANUFACTURER CONTROL JOINTS, EXPANSION JOINTS, DOOR FRAMES AND SCREENS, LOUVRES, HEADS OF WALLS AND ITEMS PASSING THROUGH WALLS.

1.16.2.3. PROVIDE SUBMITTALS FOR REVIEW.

1.16.3. EXECUTION

1.16.3.1. INSTALL PER MANUFACTURERS INSTRUCTIONS AND REQUIREMENTS.

1.17. SECTION 08 11 13 HOLLOW METAL DOORS AND FRAMES

1.17.1. GENERAL

1.17.1.1. PROVIDE SHOP DRAWINGS / SUBMITTALS FOR REVIEW PRIOR TO ORDERING MATERIALS.

1.17.2. PRODUCTS

1.17.2.1. PRE-FINISHED FIBERGLASS DOOR

1.17.2.1.1. STANDARD OF ACCEPTANCE:

1.17.2.1.2. KOHLTECH INDENT

1.17.2.1.3. DOOR

1.17.2.1.3.1. FIBERGLASS SLAB WITH A SMOOTH FINISH, FLUSH PROFILE, FACTORY WHITE FOR A FIELD PAINT COLOUR TO MATCH EXISTING EXTERIOR MUSEUM DOORS

1.17.2.1.4. FRAME

1.17.2.1.4.1. FIBERGLASS WRAPPED WOOD FRAME WITH A SMOOTH FINISH, FACTORY WHITE FOR A FIELD PAINT COLOUR TO MATCH EXISTING EXTERIOR MUSEUM DOOR FRAME & TRIM

1.17.2.1.5. HARDWARE

1.17.2.1.5.1. STAINLESS STEEL HINGES, 1/2" HIGH MAX, ASSISTED LIVING THRESHOLD WITH MILL FINISH, WHITE COMPRESSION WEATHERSTRIPPING.

1.17.3. EXECUTION

1.17.3.1. INSTALL PER MANUFACTURERS INSTRUCTIONS AND REQUIREMENTS.

1.18. SECTION 08 14 16 FLUSH WOOD DOORS

1.18.1. GENERAL

1.18.1.1. PROVIDE SHOP DRAWINGS / SUBMITTALS FOR REVIEW PRIOR TO ORDERING MATERIALS.

1.18.2 PRODUCTS

1.18.2.1. PRE-HUNG WOOD DOORS

1.18.2.1.1. STANDARD OF ACCEPTANCE:

1.18.2.1.1.1. MASONITE

1.18.2.1.1.2. CORE: SOLID

1.18.2.1.1.3. SURFACE: SMOOTH FLUSH HARDBOARD / MDF

1.18.2.1.1.4. PANEL TYPE: REFER TO DRAWINGS

1.18.2.1.1.5. HEIGHT, WIDTH AND THICKNESS: AS SCHEDULED

1.18.2.1.1.6. FINISH: FACTORY PRIMED DOOR AND FRAME

1.18.2.1.1.7. FRAME MATERIAL: SOLID WOOD

1.18.2.1.2. HARDWARE:

1.18.2.1.2.1. HINGES: 3-1/2" BUTT HINGES, BRUSHED NICKEL, BALL BEARING, FULL MORTISE, THREE PER DOOR.

1.18.2.1.2.2. ALL OTHER HARDWARE AS SCHEDULED.

1.18.3. EXECUTION

1.18.3.1. INSTALL PER MANUFACTURERS INSTRUCTIONS AND REQUIREMENTS.

1.19. SECTION 08 54 13 FIBERGLASS WINDOWS

1.19.1. GENERAL

1.19.1.1. PROVIDE SHOP DRAWINGS / SUBMITTALS FOR REVIEW PRIOR TO ORDERING MATERIALS.

1.19.1.2. PROVIDE A MOCK-UP OF THE INSTALLED SYSTEM. MOCK-UP MAY REMAIN AS PART OF THE PROJECT.

1.19.2. PRODUCTS

1.19.2.1. STANDARD OF ACCEPTANCE:

1.19.2.1.1. MARVIN WINDOWS, ELEVATE FIBERGLASS

1.19.2.1.2. TYPE: NO OPERABLE WINDOWS, FIXED UNITS WITH LOCKED-IN SCREWLESS GLASS STOPS TO ACCOMMODATE SEALED

1.19.2.1.3. COLOUR: EXTERIOR TO MATCH MUSEUM WINDOWS. INTERIOR TO BE WHITE

1.19.2.1.4. MATERIAL: FIBERGLASS/WOOD: SIZES PER DRAWINGS

1.19.2.1.5. GLASS: SEALED INSULATING GLASS

1.19.2.1.6. TRIPLE PANE, TRIPLE, LOW SOLAR HEAT GAIN, SHGC 0.24, VLT 0.40, R8.2 CENTER OF GLAZING

1.19.2.1.7. ALL PANES TO BE "OBSCURE" GLASS PANES OR SIMILAR FULL PRIVACY FINISH

1.19.3. EXECUTION

1.19.3.1. INSTALL PER MANUFACTURERS INSTRUCTIONS AND REQUIREMENTS

1.20. SECTION 08 71 00 DOOR HARDWARE

1.20.1. GENERAL

1.20.1.1. PROVIDE SHOP DRAWINGS / SUBMITTALS FOR REVIEW PRIOR TO ORDERING MATERIALS.

1.20.2. PRODUCTS

1.20.2.1. STANDARD OF ACCEPTANCE:

1.20.2.1.1. COMMERCIAL GRADE HARDWARE INCLUDING LOCKSETS, HINGES, CLOSER, EXIT HARDWARE, STOPS TO MEET THE OWNERS NEEDS.

1.20.2.2. KEYING TO BE COORDINATED WITH OWNERS NEEDS.

1.20.2.3. STANDARD OF ACCEPTANCE:

1.20.2.3.3. CLOSER: SARGENT, 351

1.20.2.3.4. DOOR STOP – WALL: STANDARD METAL S120 US26D

1.20.2.3.6. HINGES - CONTINUOUS: IVES, 112XY, 628

1.20.2.3.7. HINGES - BUTT: MCKINNEY TA314-4&1/2 " X 4" NRP, US26D

1.20.2.3.9. THRESHOLD (EXTREIOR DOORS): KNC, CT-72 X BY DOOR WIDTH, 12MM HIGH, 127 WIDE, INTEGRAL BULB SEAL, MILL FINISH ALUMINUM

1.20.2.3.10. DOOR SWEEP: KNC, W-24S X BY DOOR WIDTH, 628 CLEAR ANODIZED ALUMINUM

1.20.2.3.11. WEATHERSTRIPPING: BRUSH, PER DOOR MANUFACTURER

1.20.2.3.12. WEATHERSTRIPPING: KNC, W-20S (SILICONE), X BY DOOR WIDTH & HEIGHT, SILICONE INSERT, 628 CLEAR ANODIZED ALUMINUM

1.20.2.3.13. ASTRAGAL – BRUSH WEATHERSTRIPPING: PER DOOR MANUFACTURER

1.20.2.3.15. MOTORIZED DOOR OPERATOR: LCN, 9542 MS ANCL

1.20.2.3.16. ACTUATOR: LCN, 8310-836T

1.20.2.3.17. ELECTRICAL POWER TRANSFER: VON, EPT10

1.20.2.3.19. FLUSH BOLTS: IVES, FB458 US26D

1.20.2.3.21. ELECTRICAL STRIKE: VON, 6211AL FSE

1.20.2.3.22. ACCESS CONTROL: REFER TO ELECTRICAL DRAWINGS.

1.20.2.3.23. CYLINDRICAL LOCKSETS: SCHLAGE ND SERIES, FINISH 626, LEVER HANDLE SPA, SEE SCHEDULE FOR FUNCTION.

1.20.2.3. REFER TO DOOR SCHEDULE FOR LOCATIONS

1.20.3. EXECUTION

1.20.3.1. INSTALL PER MANUFACTURERS INSTRUCTIONS AND REQUIREMENTS.

1.21. SECTION 09 21 16 GYPSUM BOARD ASSEMBLIES

1.21.1. GENERAL

1.21.1.1. PROVIDE SUBMITTALS FOR REVIEW PRIOR TO ORDERING MATERIALS.

1.21.2. PRODUCTS

1.21.2.1. STANDARD OF ACCEPTANCE:

1.21.2.1.1. CGC

1.21.2.1.2. USE MOISTURE RESISTANT GYPSUM BOARD IN ALL OTHER MOIST AREAS INCLUDING BUT NOT LIMITED TO WASHROOMS.

1.21.2.1.3. GYPSUM BOARD SHALL COMPLY WITH CSA A82.27 AND SHALL BE 16 MM (5/8") THICK.

1.21.2.1.4. GYPSUM BOARD WORK SHALL COMPLY WITH CSA A82.31, AND THE DRYWALL CONSTRUCTION HANDBOOK

1.21.2.1.5. PROVIDE GYPSUM BOARD CEILINGS, WHERE INDICATED

1.21.2.1.6. ACCESSORIES SHALL COMPLY WITH ASTM C1047

1.21.2.1.7. INCLUDE ALL SCREWS, CORNER BEADS, CASING BEADS, J MOLDS

1.21.3. EXECUTION

1.21.3.1. INSTALL PER MANUFACTURERS INSTRUCTIONS AND REQUIREMENTS.

1.22. SECTION 09 30 10 TILING

1.22.1. GENERAL

1.22.1.1. PROVIDE SUBMITTALS FOR REVIEW PRIOR TO ORDERING MATERIALS.

1.22.2. PRODUCTS

1.22.2.1. STANDARD OF ACCEPTANCE:

1.22.2.1.1. REFER TO MATERIAL FINISH SCHEDULE

1.22.2.2. CERAMIC TILE INCLUDING BUT NOT LIMITED TO FOLLOWING:

1.22.2.2.1. ANTI-FRACTURE MEMBRANE

1.22.2.2.2. THIN SET MORTAR BED

1.22.2.2.3 CERAMIC WALL TILE, BASE, TRIM AND FITTINGS

1.22.2.2.4. INSTALLATION SYSTEMS, MORTARS AND GROUTS.

1.22.3. EXECUTION

1.22.3.1. INSTALL PER MANUFACTURERS INSTRUCTIONS AND REQUIREMENTS

1.23. SECTION 04 05 11 GROUT

1.23.1. GENERAL

1.23.1.1. PROVIDE SUBMITTALS FOR REVIEW PRIOR TO ORDERING MATERIALS

1.23.2. PRODUCTS

1.23.2.1 STANDARD OF ACCEPTANCE

1.24. SECTION 09 67 23 RESINOUS FLOORING

1.24.1. GENERAL

1.24.1.1. PROVIDE SUBMITTALS FOR REVIEW PRIOR TO ORDERING MATERIALS.

1.24.1.2. PROVIDE A MOCK-UP OF THE INSTALLED SYSTEM. MOCK-UP MAY REMAIN AS PART OF THE PROJECT.

1.24.2. PRODUCTS

1.24.2.1. STANDARD OF ACCEPTANCE:

1.24.2.1.1. STONHARD, STONSHIELD, UTS, 6 MM THICK, COMPLETE WITH INTEGRAL COVE BASE

1.24.3. EXECUTION

1.24.3.1. INSTALL PER MANUFACTURERS INSTRUCTIONS AND REQUIREMENTS.

1.24. SECTION 09 91 00 PAINTING

1.24.1. GENERAL

1.24.1.1. PROVIDE SUBMITTALS FOR REVIEW PRIOR TO ORDERING MATERIALS.

1.24.1.2. ALL PAINTING SYSTEMS SHALL HAVE 0 VOCS.

1.24.1.3. PAINTING AND FINISHING MATERIALS SHALL COMPLY WITH OR EXCEED REQUIREMENTS FOR PREMIUM GRADE WORK.

1.24.2. PRODUCTS

1.24.2.1. STANDARD OF ACCEPTANCE:

1.24.2.1.1. SEE MATERIAL FINISH SCHEDULE

1.24.2.1.2. PRIMER SUITABLE FOR WOOD AND GWB.

1.24.2.2. CEILINGS SHALL BE PAINTED EXCEPT THOSE HAVING A FACTORY APPLIED FINAL FINISH.

1.24.2.3. SHEEN

1.24.2.3.1. LATEX EGGSHELL FOR WALLS

1.24.2.3.2. LATEX FLAT FOR CEILINGS, EGGSHELL IN WASHROOM CEILINGS

1.24.2.3.3. LATEX SEMI-GLOSS FOR DOORS, DOOR FRAMES, HANDRAILS, GUARDRAILS

1.24.2.4. COLOUR AND FINISH: REFER TO MATERIAL / FINISH SCHEDULE.

1.24.3. EXECUTION

1.24.3.1. INSTALL PER MANUFACTURERS INSTRUCTIONS AND REQUIREMENTS.

1.25. SECTION 10 28 13 WASHROOM ACCESSORIES

1.25.1. GENERAL

1.25.1.1. PROVIDE SUBMITTALS FOR REVIEW PRIOR TO ORDERING MATERIALS.

1.25.2. PRODUCTS

1.25.2.1. STANDARD OF ACCEPTANCE:

1.25.2.1.1. REFER TO ACCESSORIES SCHEDULE FOR TYPES AND LOCATIONS.

1.25.3. EXECUTION

1.25.3.1. INSTALL PER MANUFACTURERS INSTRUCTIONS AND REQUIREMENTS.

WASHROOM ACCESSORIES SCHEDULE

TAG	TYPE	MANUFACTURER / SUPPLIER (STANDARD OF ACCEPTANCE)	DESCRIPTION	FINISH / TEXTURE	LOCATION	COMMENTS
Toilet Accessories						
GB1	GRAB BAR	BOBRICK	B-5898.99 762 mm x 762 mm; 32 mm diam 90° GRAB BAR, PEENED 18 ga, STAINLESS STEEL TUBING CONCEALED MOUNTING FLANGE	304 SATIN FINISH PEENED	ADJACENT WALL AT BARRIER FREE TOILET	CONTRACTOR SUPPLY & INSTALL
GB2	GRAB BAR	BOBRICK	B-5806.99 x 610 mm ; 32 mm diam STRAIGHT GRAB BAR, PEENED 18 ga STAINLESS STEEL TUBING CONCEALED MOUNTING FLANGE	304 SATIN FINISH PEENED	BEHIND BARRIER FREE TOILET (HORIZONTAL)	CONTRACTOR SUPPLY & INSTALL
MIR	MIRROR	BOBRICK	B-290 SERIES ONE-PIECE, ROLL-FORMED 19 x 19 ANGLE FRAME TYPE 304 STAINLESS STEEL ANGLE WITH SATIN FINISH NO. 1 QUALITY, 6 mm GLASS MIRROR SIZE: 610 W x 915 H	SATIN STAINLESS STEEL	(1) AT EACH SINK	CONTRACTOR SUPPLY & INSTALL
NP	NAPKIN DISPOSAL	FROST	620 SURFACE MOUNTED SANITARY NAPKIN DISPOSAL SIZE: 201 W x 328 H x 114 D	WHITE EPOXY POWDER COATED FINISH	(1) SURFACE MOUNTED	CONTRACTOR SUPPLY & INSTALL
HD	HAND DRYER	EXCEL	XLERATOReco XL-WH-ECO	WHITE EPOXY ON ZINC ALLOY	(1) SURFACE MOUNTED	CONTRACTOR SUPPLY & INSTALL
SD	SOAP DISPENSER	BOBRICK	B-2111 SERIES: CLASSIC SERIES SURFACE MOUNTED SOAP DISPENSER CONCEALED WALL FASTENING SIZE: 120 W x 205 H x 90 D	SATIN STAINLESS STEEL	(1) AT EACH SINK	CONTRACTOR SUPPLY & INSTALL
TPD	TOILET PAPER DISPENSER	JBT	09631 TOILET TISSURE DISPENSER SIZE: 291 W x 285 H x 136 D HOLDS (1) ROLL UP TO 140 dia	SMOKE/BLACK FINISH	(1) AT EACH TOILET	CONTRACTOR SUPPLY & INSTALL
WR	WASTE RECEPTABLE	BOBRICK	B-277 SERIES: CONTURA SURFACE MOUNTED SIZE: 385 W x 585 H x 215 D	SATIN/STAINLESS STEEL	(1) IN EACH WASHROOM	CONTRACTOR SUPPLY & INSTALL
SB	SHARPS BUCKET	BOBRICK	B-350169 SURFACE MOUNTED SIZE: 349 W x 486 H x 130 D	SATIN/STAINLESS STEEL	(1) IN EACH WASHROOM	CONTRACTOR SUPPLY & INSTALL
BCS	BABY CHANGE STATION	BOBRICK	KB300-SS HORIZONTAL SURFACE MOUNT SIZE: 912 W x 527 H x 101 D	POLYPROPYLENE W/ STAINLESS VENEER COLOUR: GRAY	(1) IN EACH WASHROOM	CONTRACTOR SUPPLY & INSTALL

MATERIAL / FINISH SCHEDULE

TAG	TYPE	MANUFACTURER / SUPPLIER (STANDARD OF ACCEPTANCE)	DESCRIPTION	FINISH / TEXTURE	LOCATION	COMMENTS
PRE-FINISHED METAL						
MT-1	PRE-FINISHED METAL	VICWEST	PRE-FINISHED SHEET STEEL, PERFORMED BY SEAMLESS PROCESS	COLOUR TO MATCH YELLOW TRIM	GUTTERS/DOWNSPOUTS	
WOOD						
WD-1	WOOD	CLEAR GRADE B	CEDAR SHINGLES EXPOSURE: 125 mm	CLEAR STAIN ON SITE	EXTERIOR CLADDING	
WD-2	WOOD		PINE SIZES PER DRAWINGS	REFER TO DRAWINGS FOR COLOURS & FINISHES	EXTERIOR	
WD-3	WOOD		PRESSURE TREATED SIZES: 5/4" x 6"	BROWN	EXTERIOR	
RESINOUS FLOORING						
ERF-1	RESINOUS FLOORING	STONHARD	STONESHIELD UTS 6 mm THICK	MEDIUM GRIP, SLIP RESISTANCE COLOUR: MALT	INTERIOR FLOOR	PROVIDE 100 mm HIGH RESINOUS INTEGRATED COVER BASE
TILE						
T-1	CERAMIC TILE	CENTURA	COLLECTION: ARTISAN SIZE: 60 mm x 200 mm x 8 mm PATTERN: RUNNING BOND FINISH: GLOSSY	COLOUR: WHITE #AR24464

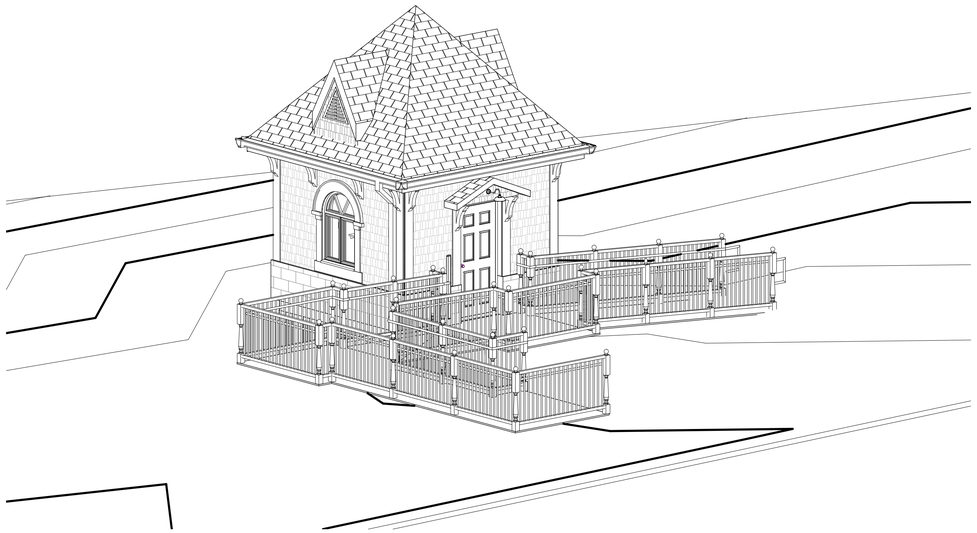

1 / A030 3D Ortho 1

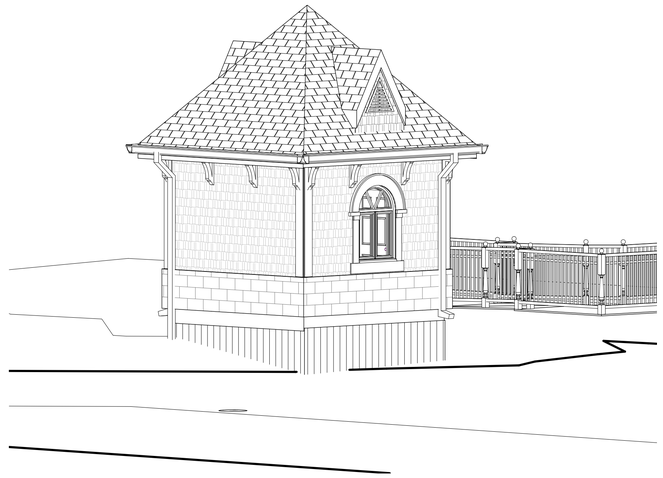

2 / A030 3D Ortho 2

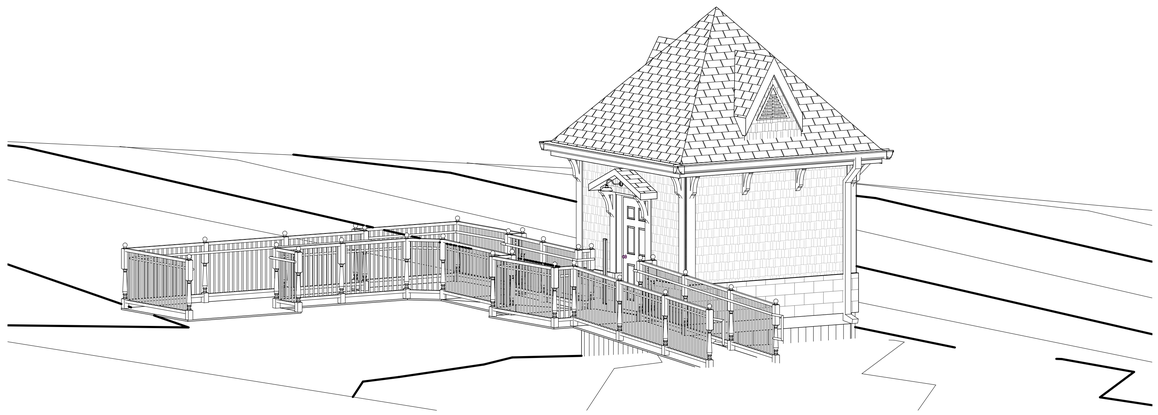

3 / A030 3D Ortho 3

COLES
Architecture + Engineering + Project Management

Coles Associates Ltd.
Suite 201, 85 Fitzroy Street
Charlottetown, PE, Canada, C1A 1R6
Phone: (902) 368-2300
www.colesassociates.com

2026-11-05 5:20:17 PM

Seal:
ARCHITECTS ASSOCIATION
19-12
CERTIFICATE of PRACTICE
Scott Daniel MacNeill
Coles Associates Ltd.
AAPEI
OF PRINCE EDWARD ISLAND
#261155 / IFP / Nov 5, 2026

Client:
Town of Three Rivers

Project Title:
Heritage Museum Washroom & Walkway

564 Main St.
Montague, PE
C0A 1R0

Sheet Title:
3D Views

Rev. No.:	Issued for:	Date: (YYYY-MM-DD)
0	Permit	2026-11-05

Scale:
Drn By: JIS
Chk By: SDM
Rev. No.: 0
Project Number: 261155
Drawing Number: A030

THIS DRAWING AND ALL COPYRIGHT THEREIN ARE THE SOLE AND EXCLUSIVE PROPERTY OF COLES ASSOCIATES LTD. REPRODUCTION OR USE OF THIS DRAWING IN WHOLE OR IN PART BY ANY FORM WHATSOEVER WITHOUT THE PRIOR WRITTEN CONSENT OF COLES ASSOCIATES LTD. IS STRICTLY PROHIBITED.

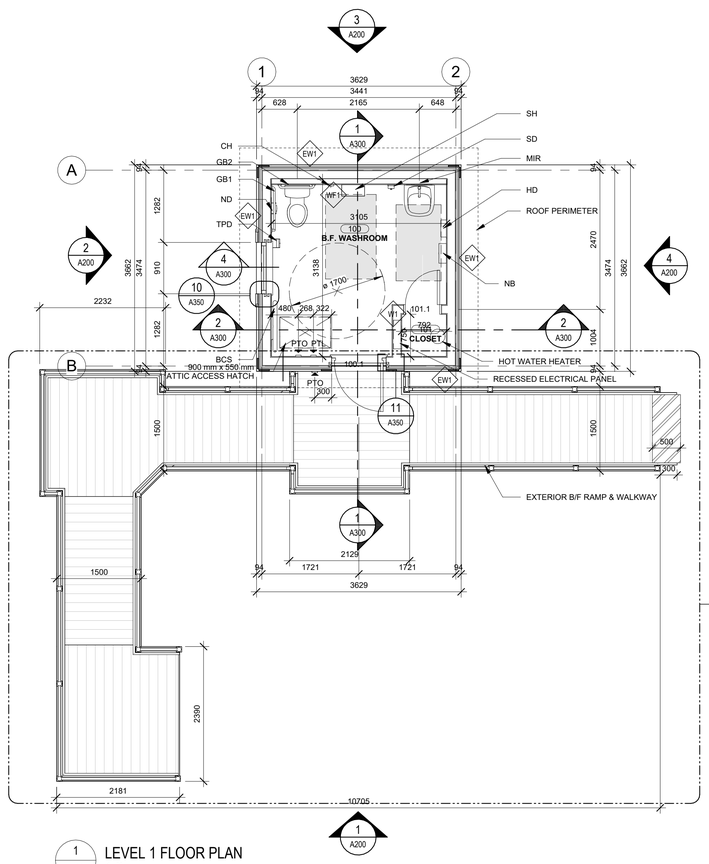

1 A100 LEVEL 1 FLOOR PLAN
1 : 50

LEGEND

101 ROOM NAME	ROOM NUMBER AND NAME
1t	DOOR TAG
EW1	WALL TAG
1700 min. / 600 min. / 2100 min. / 1500 min.	DOOR CLEAR AREA, PULL SIDE
300 min. / 1200 min.	DOOR CLEAR AREA, PUSH SIDE
	WHEELCHAIR CLEAR AREA AT SINK, MIN. 800x1350 (MAY EXTEND MAX. 430 UNDER SINK)
	WHEELCHAIR TRANSFER AREA ADJACENT TO TOILET, MIN. 900x1500
1700mm ⌀	WHEELCHAIR TURNING AREA, MIN. 1700mm ⌀
	POWER ASSISTED DOOR, LOCATION OF PUSH BUTTON ACTUATOR

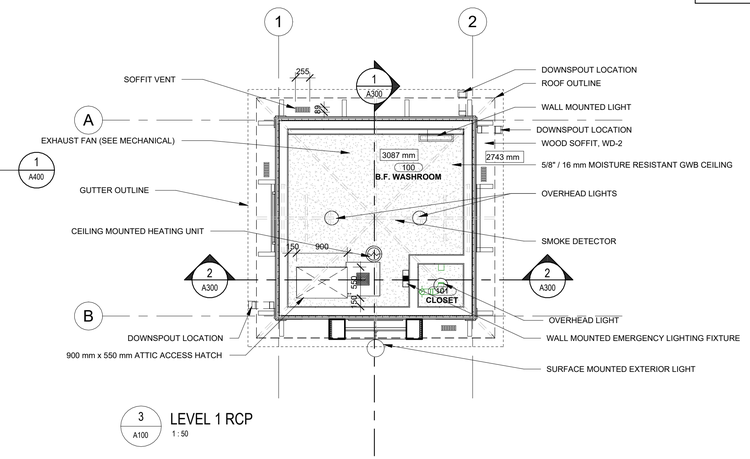

3 A100 LEVEL 1 RCP
1 : 50

EXTERIOR WALL TYPES

TAG	DESCRIPTION	RATING	DESIGN NO.:
EW1	- CLADDING (REFER TO ELEVATIONS) - 1" / 25mm RIGID INSULATION (R5) - CONTINUOUS AIR BARRIER (TAPED & STAPLED) - 1-1/2" / 12mm EXTERIOR PLYWOOD SHEATHING - 1 1/2" x 5 1/2" / 38mm x 140mm WOOD STUD FRAMING @ 16" / 400mm O.C. c/w BATT INSULATION (R22) - 6mil POLY VAPOUR BARRIER (TAPED & SEALED) - 1 LAYER, 5/8" / 16 mm MOISTURE RESISTANT GYPSUM WALL BOARD -REFER TO FINISH PLANS FOR INTERIOR FINISH		
EW2	- WOOD CEDAR SHINGLES, 5" / 125mm EXPOSURE - 1" / 25mm RIGID INSULATION (R5) - CONTINUOUS AIR BARRIER (TAPED & SEALED) - 1-1/2" / 12mm EXTERIOR PLYWOOD SHEATHING - 1 1/2" x 5 1/2" / 38mm x 140mm WOOD STUD FRAMING @ 16" / 400mm O.C. c/w BATT INSULATION (R22) - 6mil POLY VAPOUR BARRIER (TAPED & SEALED) -3/4" x 3 1/2" / 19 mm x 89 mm WOOD STRAPPING		

WOOD STUD WALL TYPES

TAG	DESCRIPTION	STC	RATING	DESIGN NO.:
W1	- 1 LAYER, 5/8" / 16mm GYPSUM WALL BOARD - 1 1/2" x 5 1/2" / 38mm x 140mm WOOD STUD FRAMING @ 16" / 400mm O.C. - 1 LAYER, 5/8" / 16mm GYPSUM WALL BOARD	36		NBC 2020, W1a
WF1	- 1 LAYER, 5/8" / 16mm GYPSUM WALL BOARD - 1 1/2" x 3 1/2" / 38mm x 89mm WOOD STUD FRAMING @ 16" / 400mm O.C. - ADJACENT WALL OR STRUCTURE			

ROOF TYPES

TAG	DESCRIPTION	RATING	DESIGN NO.:
R1	-ASPHALT ROOFING SHINGLES -CONTINUOUS HIGH TEMPERATURE MEMBRANE (SELF-ADHESIVE) -1/2" / 12 mm PLYWOOD/OSB SHEATHING c/w 'H-CLIPS' -1 1/2" x 5 1/2" / 38 mm x 140 mm WOOD RAFTERS @ 16" / 400 mm o.c. c/w FIBERGLASS BATT INSULATION (FILL CAVITY) -6MIL POLY VAPOUR BARRIER (TAPED AND SEALED) -3/4" x 3 1/2" / 19 mm x 89 mm WOOD STRAPPING @ 24" / 610 mm o.c. -5/8" / 16 mm MOISTURE RESISTANT GYPSUM WALL BOARD		
R2	-ASPHALT ROOFING SHINGLES -CONTINUOUS HIGH TEMPERATURE MEMBRANE (SELF-ADHESIVE) -1/2" / 12 mm PLYWOOD/OSB SHEATHING c/w 'H-CLIPS' -1 1/2" x 3 1/2" / 38 mm x 90 mm WOOD RAFTERS @ 16" / 400mm o.c.		

RCP GENERAL SHEET NOTES

- ALL GYPSUM BOARD CEILINGS ARE TO BE PAINTED FLAT WHITE
- REFER TO ELECTRICAL DRAWINGS FOR LIGHTING LAYOUT
- REFER TO MECHANICAL DRAWINGS FOR DIFFUSER LAYOUT

REFLECTED CEILING PLAN LEGEND

1050mm	CEILING HEIGHT TAG
	GWB: 16mm MOISTURE RESISTANT GWB.
MECHANICAL ITEMS (REFER TO MECHANICAL DRAWINGS)	
	DOMESTIC COLD WATER (DCW)
	DOMESTIC HOT WATER (DHW)
	CEILING MOUNTED HEATER
ELECTRICAL ITEMS (REFER TO ELECTRICAL DRAWINGS)	
	LUMINAIRE, WALL MOUNTED
	LUMINAIRE, DOWNLIGHT
	EXTERIOR LUMINAIRE, WALL MOUNTED

GENERAL NOTES

1. VERIFY ALL DIMENSIONS AND REPORT ANY DISCREPANCIES TO THE CONSULTANT BEFORE PROCEEDING WITH THE WORK.
2. THE WORK SHALL BE IN ACCORDANCE WITH THE NATIONAL BUILDING CODE OF CANADA (NBCC 2020).
3. THE WORK SHALL BE IN ACCORDANCE WITH ACCESSIBLE DESIGN FOR THE BUILT ENVIRONMENT CSA B651:23.
4. COMPLY WITH ALL LOCAL, MUNICIPAL AND PROVINCIAL BY-LAWS AND REGULATIONS.
5. CONTRACTOR TO VERIFY LOCATION OF ALL UTILITIES PRIOR TO EXCAVATION.
6. BENCH MARKS TO BE ESTABLISHED BY CONTRACTOR.
7. ALL WOOD FRAMING TO BE CONSTRUCTED OF APPROVED MATERIALS AND LATERALLY STRAPPED AND SUPPORTED PER NBCC 2020 STRUCTURAL REQUIREMENTS.
8. VENT ALL WASHROOM FANS TO OUTSIDE AIR. PROVIDE WEATHERPROOF VENT.
9. ALL WALL DIMENSIONS ARE TO FINISH FACE OF GYPSUM WALL BOARD UNLESS NOTED OTHERWISE.
10. PROVIDE 5/8" / 16mm MOISTURE RESISTANT GYPSUM WALL BOARD.
11. PROVIDE CORNER GUARDS AT ALL OUTSIDE CORNERS OF GWB WALLS
12. PERIMETER GRID LINES ARE TO FACE OF SHEATHING UNLESS NOTED OTHERWISE.
13. ALL OTHER DISCIPLINES SHOWN FOR GENERAL INTENT ONLY. REFER TO CORRESPONDING DRAWINGS.
14. STUD SPACING ON STRUCTURAL DRAWINGS OVERRIDES THE ARCHITECTURAL STUD SPACING.
15. REFER TO MATERIAL / FINISH SCHEDULE ON THE OUTLINE SPECIFICATION SHEET FOR INFO ON ALL MATERIAL TAGS.
16. REFER TO SCHEDULE FOR ALL WASHROOM ACCESSORY MOUNTING HEIGHTS AND DISTANCES.
17. THE ATTIC OR ROOF SPACE ACCESS HATCH IS TO BE A FIRE RATED CLOSURE. CLEAR OPENING TO BE MIN. 550mm x 900mm.
18. RAMP CONSTRUCTION:
    A. ALL LUMBER SHALL BE PRESSURE TREATED
    B. SURFACE SHALL HAVE ANTI-SLIP SURFACE
    C. RAMP SLOPE SHALL BE MAX. 1:12 SLOPE
19. CEDAR SHINGLE SIDING SHALL HAVE 5" / 125 mm EXPOSURE.
20. REFER TO EXTERIOR ELEVATIONS FOR DOWNSPOUT LOCATIONS
21. REFER TO ELECTRICAL AND MECHANICAL PLANS FOR CEILING LOCATIONS OF LIGHTING AND EQUIPMENT

ROOM FINISHES LEGEND

	RESINOUS FLOOR, ERF-1
	PRESSURE TREATED LUMBER, WD-3
	PRESSURE TREATED LUMBER, WD-3
	CERAMIC TILE, T-1
	PRIVACY GLAZING, GF-1

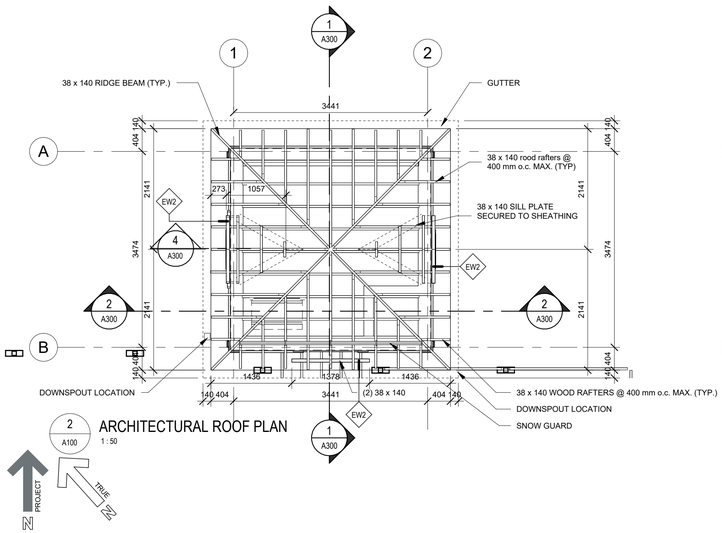

2 A100 ARCHITECTURAL ROOF PLAN
1 : 50

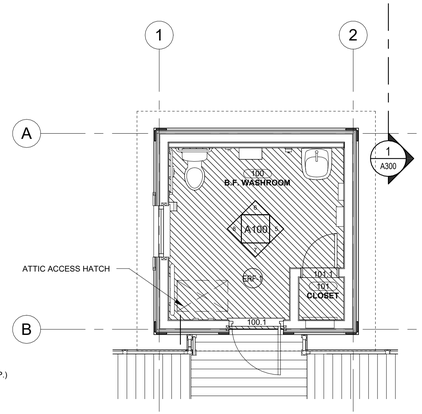

4 A100 LEVEL 1 FLOOR FINISH PLAN
1 : 50

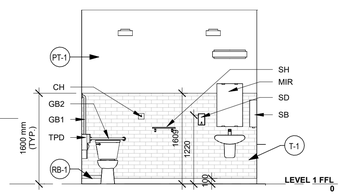

6 A100 INTERIOR ELEVATION PROJECT NORTH
1 : 50

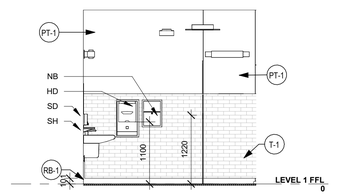

5 A100 INTERIOR ELEVATION PROJECT EAST
1 : 50

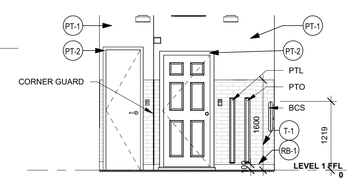

7 A100 INTERIOR ELEVATION PROJECT SOUTH
1 : 50

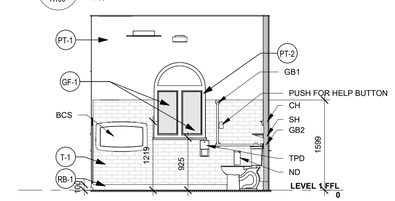

8 A100 INTERIOR ELEVATION PROJECT WEST
1 : 50

140 SERIES - ROOM FINISH SCHEDULE

ROOM NO.	ROOM NAME	FLOOR BASE	WALLS NORTH FIN.	WALLS EAST FIN.	WALLS SOUTH FIN.	WALLS WEST FIN.
100	B.F. WASHROOM	ERF-1	P-1	P-1	P-1	P-1
101	CLOSET	ERF-1	P-1	P-1	P-1	P-1

COLES
Architecture + Engineering + Project Management

Coles Associates Ltd.
Suite 201, 85 Fitzroy Street
Charlottetown, PE, Canada, C1A 1R6
Phone: (902) 368-2300
www.colesassociates.com

2026-11-05 5:20:18 PM

Seal: ENGINEERS PROJECTS ASSOCIATION 19-12 CERTIFICATE of PRACTICE Scott Daniel MacNeill Coles Associates Ltd. AAPEI OF PRINCE EDWARD ISLAND #261155 / EP / Nov 5, 2026

Client: Town of Three Rivers

Project Title: Heritage Museum Washroom & Walkway
564 Main St.
Montague, PE
C0A 1R0
Design Development

Sheet Title: Architectural Plans
Additional Notes if Necessary

Rev. No.:	Issued for:	Date: (YYYY-MM-DD)
0	Permit	2026-11-05

Scale: As indicated
Dm By: JIS
Chk By: SDM
Rev. No.: 0
Project Number: 261155
Drawing Number: A100

THIS DRAWING AND ALL COPYRIGHT THEREIN ARE THE SOLE AND EXCLUSIVE PROPERTY OF COLES ASSOCIATES LTD. REPRODUCTION OR USE OF THIS DRAWING IN WHOLE OR IN PART BY ANY FORM WHATSOEVER WITHOUT THE PRIOR WRITTEN CONSENT OF COLES ASSOCIATES LTD. IS STRICTLY PROHIBITED.

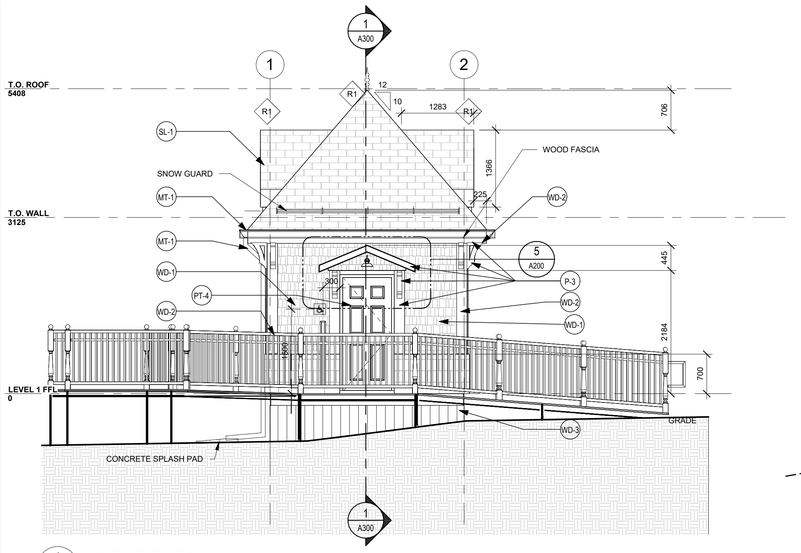

1 A200 SOUTH ELEVATION
1 : 50

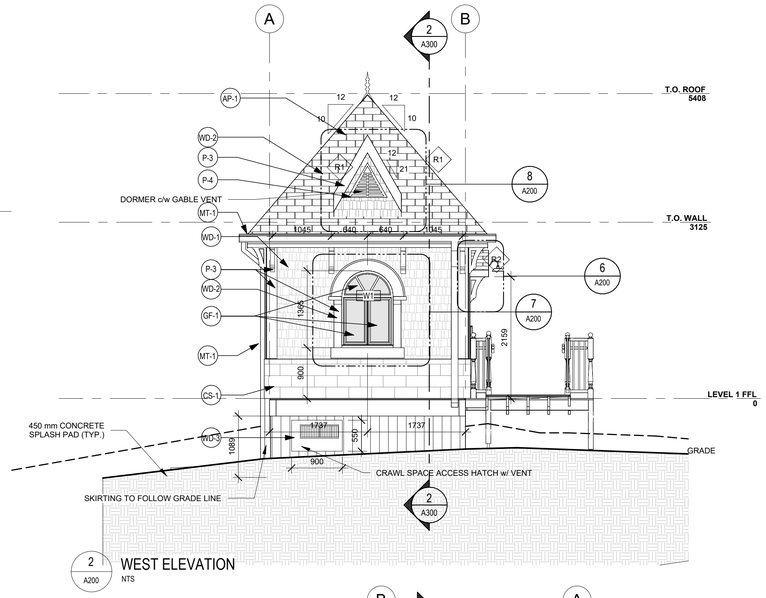

2 A200 WEST ELEVATION
NTS

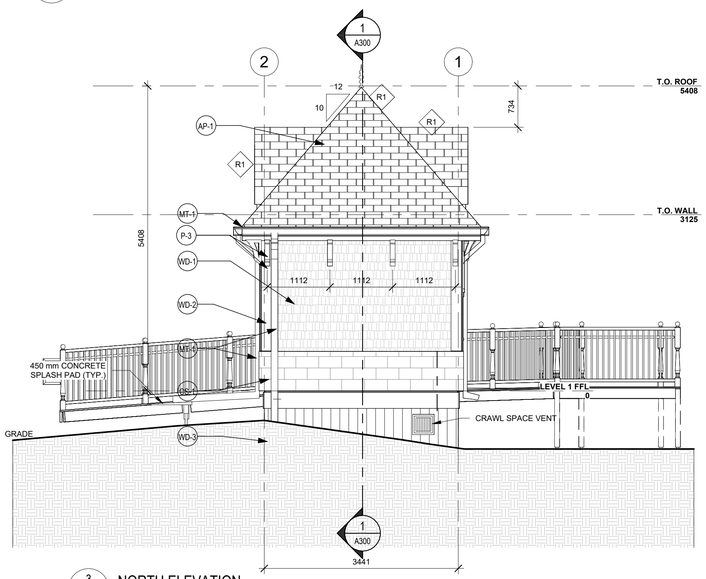

3 A200 NORTH ELEVATION
1 : 50

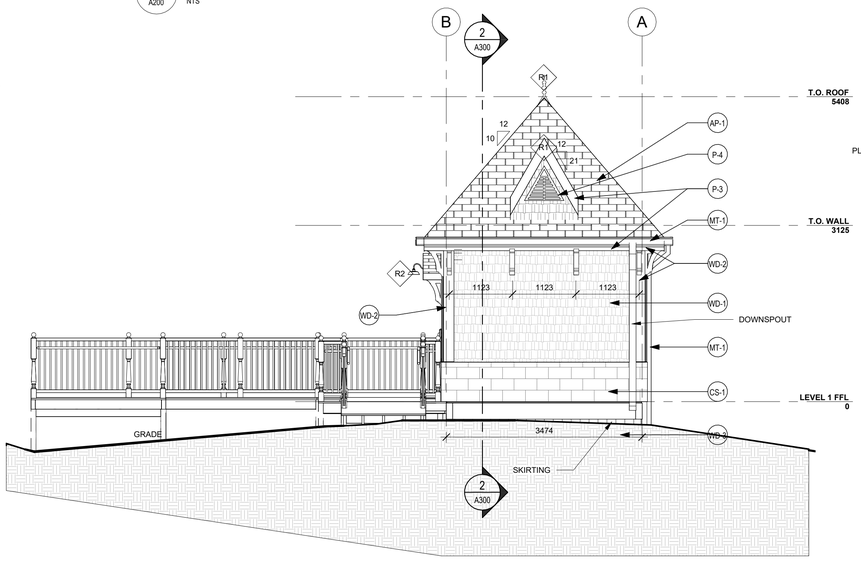

4 A200 EAST ELEVATION
1 : 50

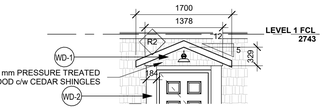

5 A200 ENLARGED ELEVATION - ENTRANCE CANOPY
1 : 50

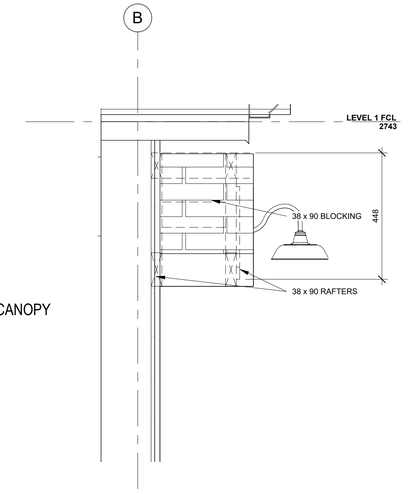

6 A200 ENLARGED ELEVATION - ENTRANCE CANOPY WEST
1 : 10

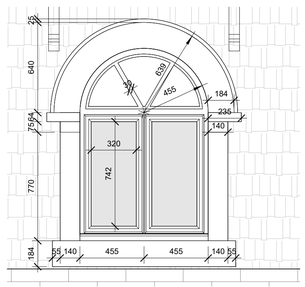

7 A200 ENLARGED WINDOW ELEVATION
1 : 20

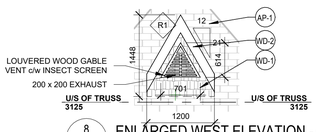

8 A200 ENLARGED WEST ELEVATION - GABLE VENT
1 : 50

WINDOW TYPE NOTES

1. ALL WINDOWS ARE DIMENSIONED TO THE ROUGH OPENINGS.

GENERAL ELEVATION NOTES

- REFER TO MATERIAL/FINISH SCHEDULE ON A003 FOR INFORMATION ON ALL MATERIAL TAGS.
- REFER TO A002 SCHEDULES FOR NOTES ON WINDOW TYPES.
- CEDAR SHINGLE SIDING SHALL HAVE 5" / 125 mm EXPOSURE.

ELEVATION MATERIAL LEGEND

- CEDAR SHINGLES, WD-1
- PAINTED WOOD, WD-2
- PRESSURE TREATED LUMBER, WD-3
- CULTURED STONE, CS-1
- METAL DOWNSPOUT, MT-1
- METAL GUTTER, MT-1
- ASPHALT SHINGLES, AP-1
- WINDOW FILM, GF-1

COLES
Architecture + Engineering + Project Management
Coles Associates Ltd.
Suite 201, 85 Fitzroy Street
Charlottetown, PE, Canada, C1A 1R6
Phone: (902) 368-2300
www.colesassociates.com

2026-11-05 9:30:22 PM

Seal: ENGINEERS PROFESSIONAL ASSOCIATION — CERTIFICATE of PRACTICE 19-12 — Scott Daniel MacNeill — Coles Associates Ltd. — AAPEI — OF PRINCE EDWARD ISLAND — #261155 / IFP / Nov 5, 2026

Client: Town of Three Rivers

Project Title: Heritage Museum Washroom & Walkway
564 Main St.
Montague, PE
C0A 1R0
Design Development

Sheet Title: Exterior Elevations

Rev. No.:	Issued for:	Date: (YYYY-MM-DD)
0	Permit	2026-11-05

Scale: As indicated
Drn By: JIS
Chk By: SDM
Rev. No.: 0
Project Number: 261155
Drawing Number: A200

THIS DRAWING AND ALL COPYRIGHT THEREIN ARE THE SOLE AND EXCLUSIVE PROPERTY OF COLES ASSOCIATES LTD. REPRODUCTION OR USE OF THIS DRAWING IN WHOLE OR IN PART BY ANY FORM WHATSOEVER WITHOUT THE PRIOR WRITTEN CONSENT OF COLES ASSOCIATES LTD. IS STRICTLY PROHIBITED.

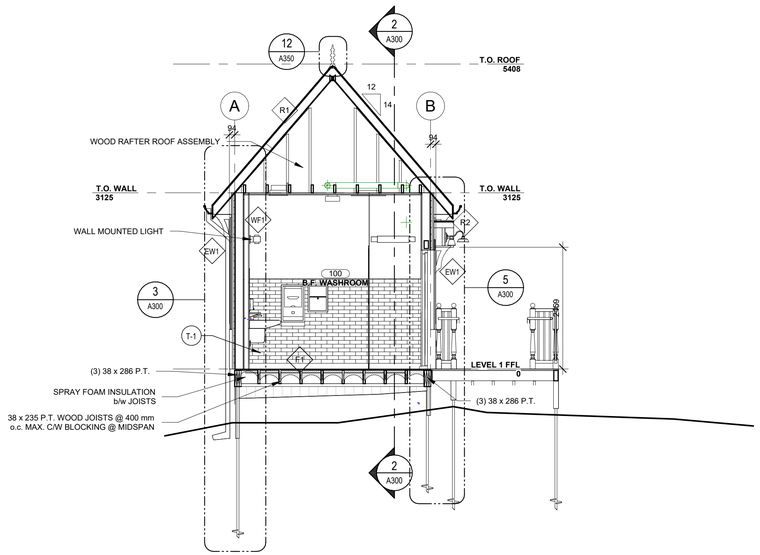

1 A300 BUILDING SECTION 1
1 : 50

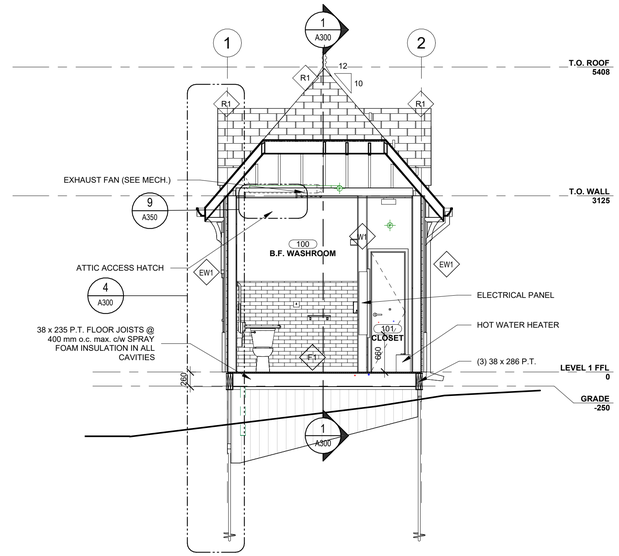

2 A300 BUILDING SECTION 2
1 : 50

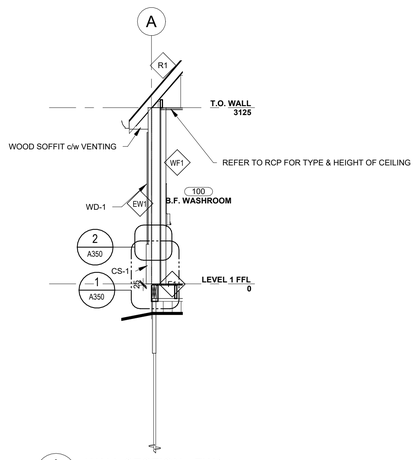

3 A300 WALL SECTION - EW1
1 : 50

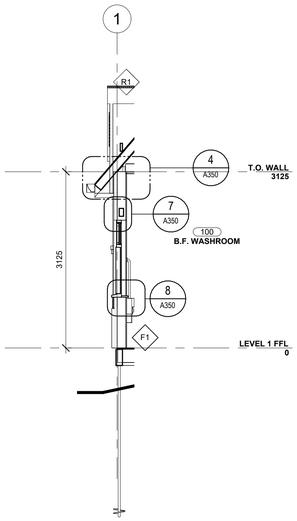

4 A300 WALL SECTION - EW1 & WINDOW
1 : 50

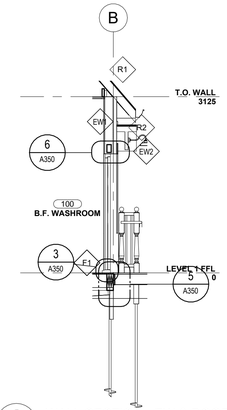

5 A300 WALL SECTION - EW & DOOR
1 : 50

COLES
Architecture + Engineering + Project Management

Coles Associates Ltd.
Suite 201, 85 Fitzroy Street
Charlottetown, PE, Canada, C1A 1R6
Phone: (902) 368-2300
www.colesassociates.com

2026-11-05 5:30:24 PM

Seal: ARCHITECTS ASSOCIATION 19-12 CERTIFICATE of PRACTICE Scott Daniel MacNeill Coles Associates Ltd. AAPEI OF PRINCE EDWARD ISLAND
#261155 / IFP / Nov 5, 2026

Client: Town of Three Rivers

Project Title: Heritage Museum Washroom & Walkway

564 Main St.
Montague, PE
C0A 1R0

Sheet Title: Building & Wall Sections

Rev. No.:	Issued for:	Date: (YYYY-MM-DD)
0	Permit	2026-11-05

Scale: 1 : 50
Drn By: JIS
Chk By: SDM
Rev. No.: 0
Project Number: 261155
Drawing Number: A300

THIS DRAWING AND ALL COPYRIGHT THEREIN ARE THE SOLE AND EXCLUSIVE PROPERTY OF COLES ASSOCIATES LTD. REPRODUCTION OR USE OF THIS DRAWING IN WHOLE OR IN PART BY ANY FORM WHATSOEVER WITHOUT THE PRIOR WRITTEN CONSENT OF COLES ASSOCIATES LTD. IS STRICTLY PROHIBITED.

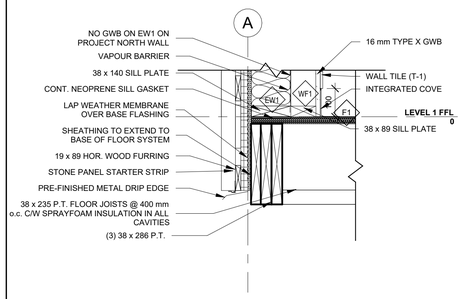

1 / A350 EW1 BASE CONNECTION
1 : 10

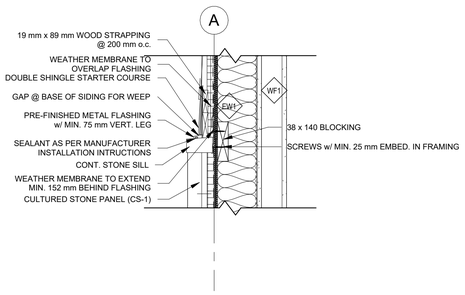

2 / A350 EW1 CLADDING TRANSITION
1 : 10

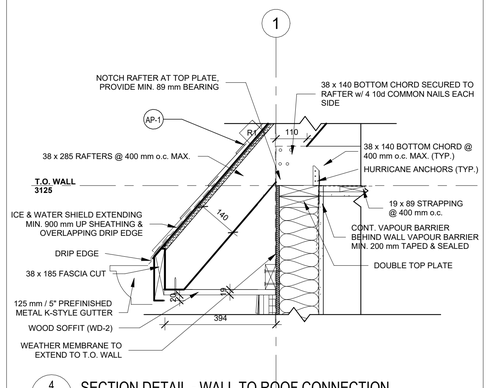

4 / A350 SECTION DETAIL - WALL TO ROOF CONNECTION
1 : 10

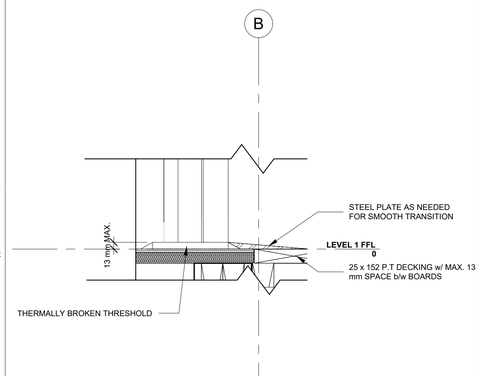

3 / A350 SECTION DETAIL - DOOR THRESHOLD
1 : 5

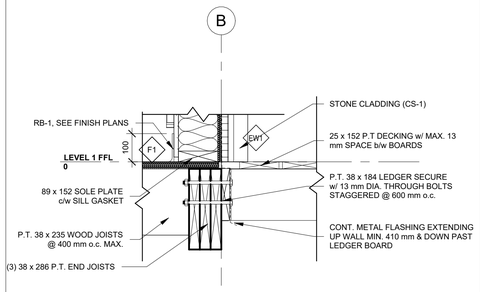

5 / A350 SECTION DETAIL - LEDGER BOARD
1 : 10

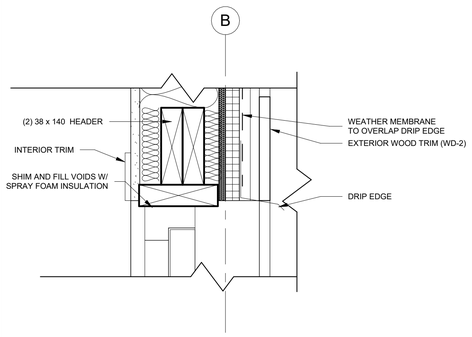

6 / A350 SECTION DETAIL - DOOR HEAD
1 : 5

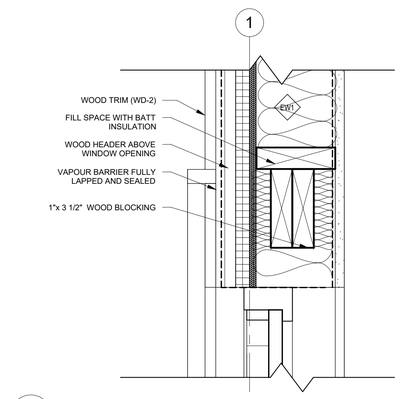

7 / A350 SECTION DETAIL - WINDOW HEAD
1 : 5

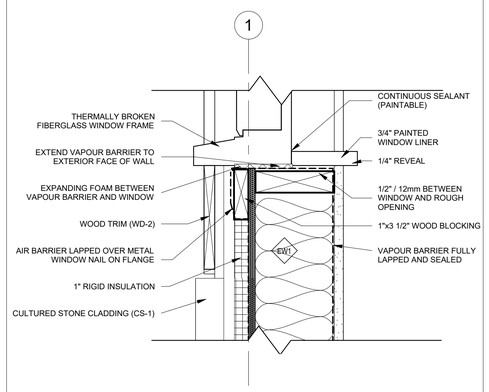

8 / A350 SECTION DETAIL - WINDOW SILL
1 : 5

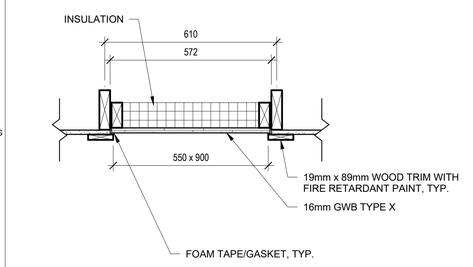

9 / A350 SECTION DETAIL - ATTIC ACCESS HATCH
1 : 10

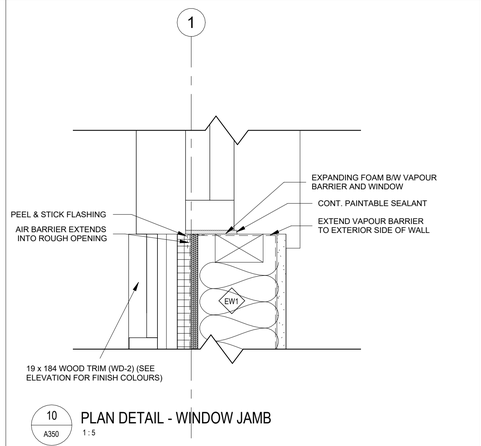

10 / A350 PLAN DETAIL - WINDOW JAMB
1 : 5

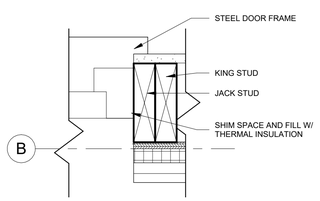

11 / A350 PLAN DETAIL - DOOR JAMB
1 : 5

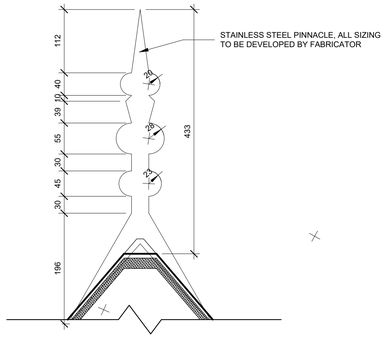

12 / A350 PINNACLE DETAIL
1 : 5

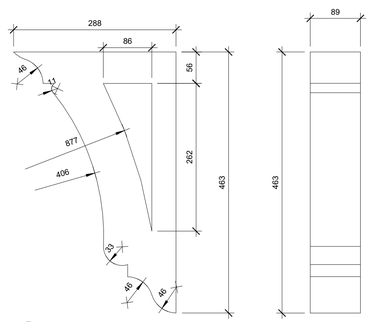

13 / A350 CORBEL DETAIL
1 : 5

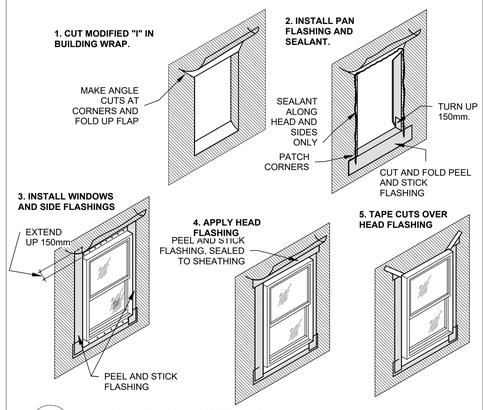

14 / A350 WINDOW FLASHING DETAILS
1 : 15

COLES
Architecture + Engineering + Project Management
Coles Associates Ltd.
Suite 201, 85 Fitzroy Street
Charlottetown, PE. Canada, C1A 1R6
Phone: (902) 368-2300
www.colesassociates.com

2026-11-05 5:25:26 PM

Seal: ARCHITECTS ASSOCIATION 19-12 CERTIFICATE of PRACTICE Scott Daniel MacNeill Coles Associates Ltd. AAPEI OF PRINCE EDWARD ISLAND
#261155 / EP / Nov 5, 2026

Client: Town of Three Rivers

Project Title: Heritage Museum Washroom & Walkway

564 Main St.
Montague, PE
C0A 1R0

Sheet Title: Section & Plan Details

Rev. No.:	Issued for:	Date: (YYYY-MM-DD)
0	Permit	2026-11-05

Scale: As indicated
Drn By: JIS
Chk By: SDM
Rev. No.: 0
Project Number: 261155
Drawing Number: A350

THIS DRAWING AND ALL COPYRIGHT THEREIN ARE THE SOLE AND EXCLUSIVE PROPERTY OF COLES ASSOCIATES LTD. REPRODUCTION OR USE OF THIS DRAWING IN WHOLE OR IN PART BY ANY FORM WHATSOEVER WITHOUT THE PRIOR WRITTEN CONSENT OF COLES ASSOCIATES LTD. IS STRICTLY PROHIBITED.

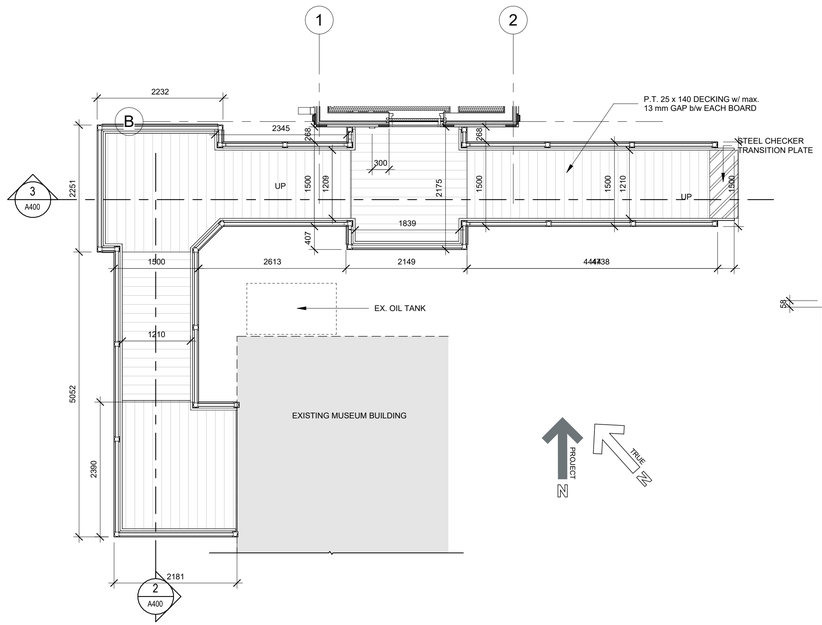

1 A400 ENLARGED EXTERIOR WALKWAY
1 : 50

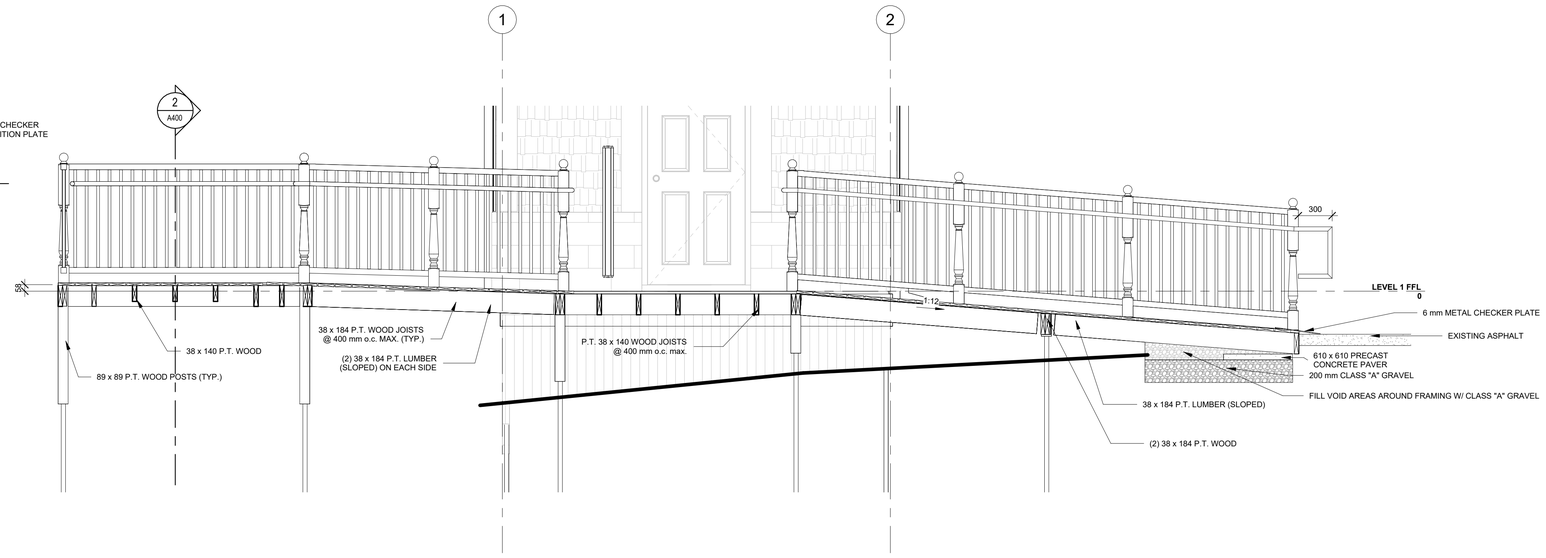

3 A400 ENLARGED EXT. WALKWAY SECTION 1
1 : 25

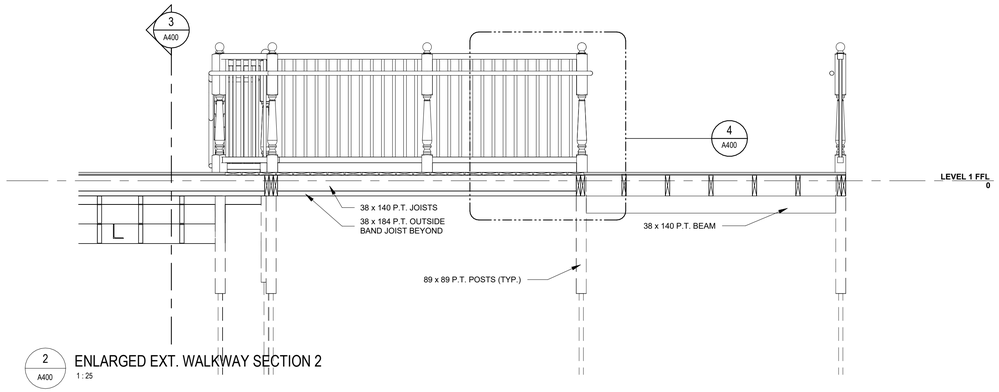

2 A400 ENLARGED EXT. WALKWAY SECTION 2
1 : 25

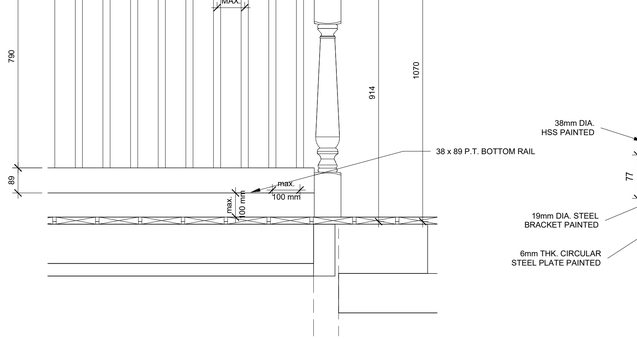

4 A400 ENLARGED RAILING ELEVATION
1 : 10

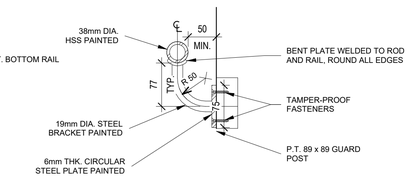

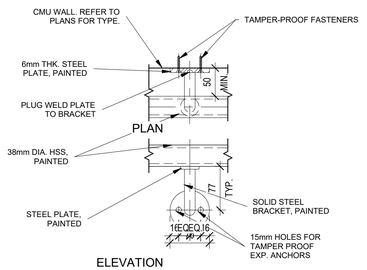

6 A400 Railing Details
1 : 5

GENERAL NOTES:

1. SEE STRUCTURAL DRAWINGS FOR FRAMING. INFORMATION ON STRUCTURAL DRAWINGS WILL OVERRIDE OTHERS.
2. ALL WOOD SHALL BE PRESSURE TREATED FOR EXTERIOR WALKWAY.
3. DECK BOARDS SHALL HAVE MAX. 13mm GAP b/w BOARDS.
4. MAX SPACE OF ANY RAILING AND GUARD ELEMENTS SHALL BE MAX. 100 mm.

COLES
Architecture + Engineering + Project Management

Coles Associates Ltd.
Suite 201, 85 Fitzroy Street
Charlottetown, PE, Canada, C1A 1R6
Phone: (902) 368-2300
www.colesassociates.com

2026-11-05 9:20:29 PM

Seal: ARCHITECTS ASSOCIATION OF PRINCE EDWARD ISLAND — 19-12 — CERTIFICATE of PRACTICE — Scott Daniel MacNeill — Coles Associates Ltd. — AAPEI
#261155 / IFP / Nov 5, 2026

Client: Town of Three Rivers

Project Title: Heritage Museum Washroom & Walkway

564 Main St.
Montague, PE
C0A 1R0

Sheet Title: Vertical Circulation

Rev. No.:	Issued for:	Date: (YYYY-MM-DD)
0	Permit	2026-11-05

Scale: As indicated
Drn By: JIS
Chk By: SDM
Rev. No.: 0
Project Number: 261155
Drawing Number: A400

THIS DRAWING AND ALL COPYRIGHT THEREIN ARE THE SOLE AND EXCLUSIVE PROPERTY OF COLES ASSOCIATES LTD. REPRODUCTION OR USE OF THIS DRAWING IN WHOLE OR IN PART BY ANY FORM WHATSOEVER WITHOUT THE PRIOR WRITTEN CONSENT OF COLES ASSOCIATES LTD. IS STRICTLY PROHIBITED.

1. GENERAL

1.1. GENERAL

1.1.1. THE FOLLOWING GENERAL CONDITIONS SHALL BE READ IN CONJUNCTION WITH THE GENERAL CONDITIONS AND SPECIAL CONDITIONS ISSUED BY THE PROJECT MANAGER. INCLUDING BUT NOT LIMITED TO THE RESTROOM PLACES AND EQUIPMENT PLACES DEFINED BY EQUIPMENT OF SCOPE OF WORK.

1.2. SCOPE OF WORK

1.2.1. THE WORK SHALL INCLUDE THE FURNISHING OF ALL LABOR, MATERIALS, EQUIPMENT, PLANT TOOLS AND SERVICES NECESSARY FOR THE INSTALLATION OF THE MECHANICAL SYSTEMS AS INDICATED. THE WORK SHALL INCLUDE THE FOLLOWING:

1.2.1.1. PLUMBING

1.2.1.1.1. PROVIDE AND INSTALL AN UNDERGROUND SANITARY SEWER AND VENTING SYSTEM AS SHOWN.

1.2.1.1.2. PROVIDE AND INSTALL DOMESTIC COLD AND HOT WATER PIPING, INCLUDING DOMESTIC HOT WATER HEATER, PIPING AND VALVED CONNECTION TO EQUIPMENT AND FIXTURES.

1.2.1.2. HEATING

1.2.1.2.1. PROVIDE ELECTRIC UNIT HEATER PER DRAWINGS.

1.2.1.2.2. PROVIDE INSULATION, TESTING, AND COMMISSIONING OF HEATING SYSTEM IN ACCORDANCE WITH SPECIFICATIONS.

1.2.1.3. VENTILATION

1.2.1.3.1. PROVIDE AND INSTALL VENTILATION EQUIPMENT, INCLUDING DUCTWORK, EXHAUST FAN , ANY NECESSARY ACCESSORIES AND EQUIPMENT STARTUP.

1.3. DRAWINGS

1.3.1. THE DRAWINGS FOR THE WORK ACCOMPANYING THESE SPECIFICATIONS ARE MADE AS ACCURATELY AS POSSIBLE, BUT ABSOLUTE ACCURACY OF DIMENSIONS CANNOT BE GUARANTEED. THEY ARE INTENDED TO SUPPLEMENT AND SIMPLIFY THE GENERAL CONTRACT DRAWINGS. NO CLAIM FOR EXTRA PAYMENT ON ACCOUNT OF DIFFERENCE OF ACTUAL AND ESTIMATED DIMENSIONS SHALL BE ALLOWED. IN THE CASE OF DISCREPANCY OF FIGURE DIMENSIONS ON THE DRAWINGS, THE MATTER SHALL BE IMMEDIATELY SUBMITTED TO THE ENGINEER FOR HIS DECISION. WITHOUT THE DECISION, THE DISCREPANCY SHALL NOT BE ADJUSTED BY THE CONTRACTOR. THE CONTRACTOR SHALL BEAR ALL EXTRA EXPENSES INVOLVED IN COMPLICATIONS ARISING FROM MAKING ADJUSTMENTS WITHOUT APPROVAL FROM THE OWNER. INTERPRETATION OF ALL DOCUMENTS SHALL BE BY THE ENGINEER.

1.4. EXTRA WORK

1.4.1. NO ADDITIONAL MONEY OVER CONTRACT PRICE SHALL BE PAID UNLESS CONTRACTOR RECEIVES A SIGNED APPROVAL IN ACCORDANCE WITH THE GENERAL CONDITIONS. NO ADDITIONAL MONEY SHALL BE PAID FOR USE OF EQUAL PRODUCTS.

1.5. QUALIFICATIONS

1.5.1. WORK SHALL BE COMPLETED BY A LICENSED CONTRACTOR CERTIFIED FOR THE INSTALLATION OF SYSTEMS AND EQUIPMENT IN ACCORDANCE WITH THE REQUIREMENTS OF THE LOCAL CODES AND REGULATIONS.

1.6. WARRANTY

1.6.1. ALL EQUIPMENT, MATERIAL AND LABOUR PROVIDED BY THE CONTRACTOR SHALL BE GUARANTEED TO BE FREE FROM DEFECTS FOR A PERIOD OF ONE YEAR FROM THE DATE OF ACCEPTED SUBSTANTIAL COMPLETION. CONTRACTOR SHALL REPAIR OR REPLACE ANY EQUIPMENT OR MATERIAL WHICH IS DEFECTIVE OR IMPROPERLY INSTALLED. IN ADDITION, THIS CONTRACTOR SHALL ASSUME FULL RESPONSIBILITY FOR ANY DAMAGE TO THE BUILDINGS AND ITS CONTENTS OR OTHER EQUIPMENT, CAUSED BY DEFECTS OR IMPROPER INSTALLATION OF EQUIPMENT.

1.7. COOPERATION WITH OTHER TRADES

1.7.1. CONTRACTOR SHALL COORDINATE ALL MECHANICAL WORK WITH ARCHITECTURAL, STRUCTURAL, AND ELECTRICAL TRADES PRIOR TO INSTALLATION. VERIFY ALL CLEARANCES, CEILING SPACES, EQUIPMENT ACCESS, AND SERVICE ROUTING.

1.7.2. REPORT ANY CONFLICTS OR DISCREPANCIES TO THE ENGINEER PRIOR TO PROCEEDING WITH WORK. NO ADDITIONAL COSTS WILL BE ACCEPTED DUE TO LACK OF COORDINATION.

1.7.3. WORK SHALL BE EXECUTED IN A MANNER TO MINIMIZE DISRUPTION TO BUILDING OPERATIONS. ALL SERVICE INTERRUPTIONS SHALL BE SCHEDULED AND APPROVED IN ADVANCE.

1.8. EXAMINATION OF SITE

1.8.1. BEFORE TENDERING, EXAMINE THE SITE AND THE LOCAL CONDITIONS AFFECTING THE WORK OF THIS CONTRACT. NO ALLOWANCE WILL BE MADE FOR ANY EXPENSE INCURRED THROUGH FAILURE TO MAKE THIS EXAMINATION.

1.8.2. CONTRACTOR SHALL FIELD VERIFY ALL EXISTING CONDITIONS PRIOR TO COMMENCING WORK. DRAWINGS ARE DIAGRAMMATIC AND MAY NOT SHOW ALL SITE CONDITIONS. INCLUDE ALL LABOUR AND MATERIAL REQUIRED TO SUIT EXISTING CONDITIONS.

1.9. PERMITS, FEES AND CERTIFICATES

1.9.1. APPLY FOR, OBTAIN, AND PAY FOR ALL PERMITS AND INSPECTIONS REQUIRED.
1.9.2. ANY ADDITIONAL MATERIALS OR LABOUR REQUIRED TO CONFORM TO ANY OF THE REGULATIONS OR REQUIREMENTS OF A.H.J. SHALL BE FURNISHED UNDER THE CONTRACT WITH NO ADDITIONAL COST TO THE OWNER.

1.10. CLEAN UP AND REMOVALS

1.10.1. THE CONTRACTORS SHALL, AT ALL TIMES, KEEP THE SITE NEAT, CLEAN AND FREE FROM ACCUMULATION OF WASTE, MATERIALS AND RUBBISH WHICH ARISE OUT OF THEIR WORK. ALL MATERIAL DESIGNATED TO BE REMOVED SHALL BE DISPOSED OF OFF SITE BY THIS CONTRACTOR.

1.11. INSTALLATION AND COMMISSIONING OF EQUIPMENT

1.11.1. MANUFACTURER'S INSTRUCTIONS SHALL BE MADE AVAILABLE TO BOTH THE INSTALLING TRADESMEN AND THE ON-SITE INSPECTOR PRIOR TO INSTALLATION OF EQUIPMENT. THESE INSTRUCTIONS ARE TO BE READ, UNDERSTOOD AND CLOSELY FOLLOWED. FAILURE TO ABIDE BY THIS REQUIREMENT WILL PROVIDE JUSTIFICATION FOR THE ENGINEER TO REQUIRE REMOVAL AND RE-INSTALLATION.

1.12. DEMONSTRATION OF COMPLETE SYSTEMS

1.12.1. AT THE CONCLUSION OF THE JOB, THE CONTRACTOR SHALL REVIEW AND DEMONSTRATE TO THE OWNER ALL EQUIPMENT AND THEIR RESPECTIVE FUNCTIONS AND OPERATION. SUCH DEMONSTRATION SHALL BE PROVIDED FOR SUCH REASONABLE PERIODS OF TIME AS THE COMPLEXITY OF THE JOB WARRANTS, AND AS APPROVED BY THE ENGINEER. SUCH REVIEW AND DEMONSTRATION SHALL BE MADE BY AN AUTHORIZED REPRESENTATIVE OF THE CONTRACTOR, FULLY KNOWLEDGEABLE OF THE PROJECT, IT'S INSTALLATION AND OPERATION.

1.13. FINAL INSPECTION

1.13.1. PRIOR TO SUBSTANTIAL COMPLETION AND FINAL INSPECTION OF THE PROJECT, CONTRACTOR WILL INSPECT THE PROJECT, PROVIDE A MECHANICAL DEFICIENCY LIST, PROVIDE CONFIRMATION THAT ALL ITEMS ON THE LIST HAVE BEEN CORRECTED, PROVIDE THE OPERATION AND MAINTENANCE MANUALS, PROVIDE THE RECORD DRAWINGS, AND PROVIDE THE DEMONSTRATION OF THE COMPLETED MECHANICAL SYSTEMS.

1.13.2. ALL OF THE ABOVE MUST BE COMPLETED PRIOR TO THE FINAL INSPECTION BY THE ENGINEER AND SUBSTANTIAL COMPLETION OF THE MECHANICAL SYSTEMS.

1.13.3. SUBMIT ALL COMMISSIONING DOCUMENTATION INCLUDING STARTUP REPORTS, TESTING, AND WARRANTY CERTIFICATES PRIOR TO FINAL INSPECTION.

1.14. SHOP DRAWINGS

1.14.1. SUBMIT ELECTRONIC SHOP DRAWINGS FOR REVIEW PRIOR TO FABRICATION OR INSTALLATION. ALLOW A MINIMUM OF TEN (10) WORKING DAYS FOR REVIEW.

1.14.2. SHOP DRAWINGS SHALL INCLUDE ALL RELEVANT PRODUCT DATA, PERFORMANCE DATA, AND INSTALLATION REQUIREMENTS.

1.15. OPERATION AND MAINTENANCE MANUAL

1.15.1. CONTRACTOR SHALL INSTRUCT THE OWNER IN OPERATION OF MAINTENANCE OF ALL EQUIPMENT AND SYSTEMS INSTALLED. ALL SAFETY AND CONTROL FEATURES SHALL BE THOROUGHLY EXPLAINED. CONTRACTOR TO PROVIDE MAINTENANCE MANUALS FOR ALL EQUIPMENT INSTALLED, ONE (1) FINAL ELECTRONIC COPY AND ONE (1) FINAL COPY ORGANIZED IN A 215.9mm x 279.4mm BINDER TO BE PROVIDED TOGETHER WITH ALL APPROVED SHOP DRAWINGS AND A SPARE PARTS LIST.

1.16. RECORD DRAWINGS

1.16.1. CONTRACTOR TO PROVIDE AS-BUILT RECORD DRAWINGS.

1.17. CLOSEOUT DOCUMENTATION

1.17.1. PROVIDE COMPLETE CLOSEOUT DOCUMENTATION INCLUDING:

1.17.1.1. OPERATION AND MAINTENANCE MANUALS

1.17.1.2. RECORD DRAWINGS / AS-BUILTS

1.17.1.3. STARTUP REPORTS

1.17.1.4. WARRANTY CERTIFICATES

1.18. DUCT AND PIPING IDENTIFICATION

1.18.1. USE 50mm HIGH BLACK STENCILED LETTERS WITH DIRECTIONAL FLOW ARROW

1.18.2. STENCIL OVER FINAL FINISH ONLY

1.19. STANDARDS OF ACCEPTANCE

1.19.1. ALL EQUIPMENT MANUFACTURERS LISTED FORM THE STANDARD OF ACCEPTANCE FOR THE EQUIPMENT REQUIRED. ALTERNATE EQUIPMENT MAY BE SUBSTITUTED ONLY AFTER RECEIVING APPROVED EQUAL STATUS FROM ENGINEER DURING TENDER PROCESS ONLY. PROVIDE SHOP DRAWINGS ON ALL MAJOR EQUIPMENT PRIOR TO ORDERING ANY EQUIPMENT. IF ALTERNATE EQUIPMENT IS APPROVED BY ENGINEER ALL COSTS ASSOCIATED WITH ANY REQUIRED MODIFICATIONS, CHANGES, ETC TO USE THE ALTERNATE EQUIPMENT SHALL BE THE RESPONSIBILITY OF THE CONTRACTOR.

1.19.2. NO SUBSTITUTIONS WILL BE ACCEPTED AFTER TENDER CLOSING UNLESS APPROVED IN WRITING BY THE ENGINEER.

1.20. CLEANING AND FINAL ADJUSTMENT

1.20.1. CLEAN INTERIOR AND EXTERIOR OF ALL SYSTEMS.

1.20.2. BALANCE AND ADJUST ALL SYSTEMS AND EACH PIECE OF EQUIPMENT TO OPERATE EFFICIENTLY.

1.21. CUTTING AND PATCHING

1.21.1. ALL CUTTING AND PATCHING WILL BE THE RESPONSIBILITY OF THIS CONTRACTOR.

1.22. SLEEVES

1.22.1. THE CONTRACTOR IS TO SUPPLY AND SET IN PLACE PIPE AND/OR DUCT SLEEVES IN FLOOR, ROOF OR FIRE WALLS BEFORE CONCRETE IS POURED.

1.23. EXCAVATION AND BACKFILLING

1.23.1. ALL EXCAVATION AND BACKFILLING WILL BE THE RESPONSIBILITY OF THIS CONTRACTOR.

1.24. PROTECTION OF OPENINGS

1.24.1. PROTECT EQUIPMENT, SYSTEM OPENINGS INCLUDING ROUGH-IN PLUMBING FROM DIRT, DUST AND OTHER FOREIGN MATERIALS WITH MATERIALS COMPATIBLE TO THE SYSTEM.

1.25. ACCESS DOORS

1.25.1. THIS CONTRACTOR TO PROVIDE ACCESS DOORS FOR FURRED CEILINGS OR SPACES FOR SERVICING EQUIPMENT AND ACCESSORIES OR FOR INSPECTION OF SAFETY, OPERATING OR FIRE DEVICES FOR INSTALLATION UNDER CONTRACT ERECTING THE WALLS OR CEILINGS. SUPPLY ULC RATED DOORS IN FIRE RATED CONSTRUCTION.

1.25.2. ACCESS DOORS SHALL BE FLUSH MOUNTED 600mm x 600mm FOR BODY ENTRY, 300mm x 300mm FOR HAND ENTRY, OR AS NOTED ON THE DRAWINGS. DOORS SHALL OPEN 180°, HAVE ROUNDED SAFETY CORNERS, CONCEALED HINGES, CYLINDER KEY LOCKS, AND ANCHOR STRAPS. STEEL SHALL BE PRIME COATED. DOORS SHALL BE OF APPROVED MANUFACTURER WITH PUBLISHED LITERATURE.

1.25.3. PROVIDE CAM TYPE LOCKING DEVICE WITH CYLINDER KEY LOCK COMPLETE WITH MASTER

1.25.4. STANDARD OF ACCEPTANCE: MIFAB #UA, WILLIAMS BROTHERS #WB SERIES, OR APPROVED EQUAL.

1.26. SAFETY

1.26.1. CONTRACTOR SHALL WORK UNDER THE REQUIREMENTS OF THE GENERAL CONTRACTORS SITE SAFETY PLAN. CONTRACTOR IS TO COMPLY WITH ALL REQUIREMENTS OF THE PROVINCIAL OCCUPATIONAL HEALTH AND SAFETY ACT, REGULATION AND WORKERS COMPENSATION BOARD. CONTRACTOR SHALL REVIEW ANY SITE SPECIFIC SAFETY REQUIREMENTS WITH OWNER AND ATTEND TRAINING AS REQUIRED PRIOR MOBILIZATION TO KEYS.

1.27. TEMPORARY HEAT

1.27.1. TEMPORARY HEAT FOR THE PROJECT SHALL BE THE RESPONSIBILITY OF THE GENERAL CONTRACTOR.

1.28. ACCESS AND MAINTAINABILITY

1.28.1. PROVIDE ADEQUATE ACCESS AND CLEARANCES FOR ALL EQUIPMENT AND SYSTEM COMPONENTS FOR OPERATION, MAINTENANCE, AND REPLACEMENT IN ACCORDANCE WITH MANUFACTURER REQUIREMENTS.
SITE.

1.28.2. DO NOT INSTALL EQUIPMENT IN LOCATIONS THAT RESTRICT ACCESS WITHOUT PRIOR APPROVAL FROM ENGINEER.

1.29. VIBRATION AND SEISMIC CONTROL

1.29.1. PROVIDE VIBRATION ISOLATION FOR ALL ROTATING EQUIPMENT INCLUDING PUMPS, FANS, AND AIR HANDLING UNITS.

1.29.2. PROVIDE SEISMIC RESTRAINTS FOR ALL EQUIPMENT AND PIPING WHERE REQUIRED BY CODE.

2. INSULATION

2.1. PIPING

2.1.1. PROVIDE 25mm INSULATION TO ALL PIPING, VALVES AND FITTINGS FOR ALL DOMESTIC COLD AND HOT WATER AND ANY EXTERIOR PIPING .

2.1.1.3. PROVIDE HIGH DENSITY INSULATION OR CALCIUM SILICATE INSULATION UNDER ALL PIPE HANGERS.

2.1.1.1. EXCEPTION: IF PP-R OR PEX PIPING IS USED, INSULATION IS NOT REQUIRED ON DOMESTIC COLD WATER PIPING. INSULATION IS REQUIRED ON ALL DOMESTIC HOT WATER REGARDLESS OF PIPING CHOSEN.

2.1.1.2. ALL CONCEALED PIPE TO BE PROVIDED WITH ALL SERVICE JACKET. ALL EXPOSED PIPING TO BE PROVIDED WITH PVC JACKET.

2.1.1.4. STANDARD OF ACCEPTANCE:

2.1.1.4.1. RIGID PIPE: MANSON ALLEY K APT, OWENS CORNING, OWENS CORNING VAPOURWICK, MANVILLE MICRO LOK, KNAUF OR APPROVED EQUAL.

2.1.1.4.2. PEX: TUNDRASEAL PLUS OR APPROVED EQUAL.

2.1.2. APPLY INSULATION AFTER REQUIRED TESTS HAVE BEEN COMPLETED AND APPROVED BY ENGINEER. INSULATION AND SURFACES SHALL BE CLEAN AND DRY WHEN INSTALLED AND DURING APPLICATION OF ANY FINISH.

2.1.3. INSULATION IS NOT REQUIRED FOR:

2.1.3.1. CHROME-PLATED PIPING, FLANGES AND VALVE BONNETS ON DOMESTIC HOT AND COLD WATER SERVICES, EXCEPT AS REQUIRED BY CODE.

2.1.3.2. INDOOR SANITARY DRAINAGE PIPING

2.2. DUCTWORK

2.2.1. PROVIDE 25mm THICK FIBERGLASS DUCT INSULATION c/w FACTORY APPLIED FOIL SCRIM-KRAFT VAPOR JACKET ON ALL EXHAUST DUCTWORK 3m IN FROM EXTERIOR WALL.

3. PLUMBING

3.1. GENERAL

3.1.1. ALL WORK TO BE COMPLETED IN ACCORDANCE WITH NBC, CPC, AND AUTHORITIES HAVING JURISDICTION. CONNECT PIPING AS REQUIRED TO MEET CODE.

3.1.2. CONTRACTOR SHALL CONDUCT AND PAY FOR ALL PIPING TESTS. ALL TESTS SHALL BE CARRIED OUT IN THE PRESENCE OF THE OWNER.

3.2. PIPING

3.2.1. BELOW GRADE SANITARY PIPING TO BE PVC-DWV, ABS-DWV, CAST IRON, SLOPED AT 1:100.

3.2.2. ABOVE GRADE DRAINAGE AND VENTS - COPPER DWV, CAST IRON, PVC-DWV (CONCEALED PIPING ONLY), PVC XFR*

3.2.3. WATER ABOVE GRADE - TYPE L COPPER, PEX

3.2.4. WATER BELOW GRADE - PEX

* PVC XFR, COPPER AND CAST IRON SHALL BE USED EXCLUSIVELY IN NON-COMBUSTIBLE CONSTRUCTION, PLENUM RATED SPACE, AND PENETRATIONS OF FIRE RATED WALLS.

3.3. HANGERS

3.3.1. CLEVIS TYPE WITH THREADED RODS. SPACING 1.8m < 40mm, 3m > 50mm.

3.3.1.1. USE GRINNELL FIG. CT-69 FOR HORIZONTAL HOT AND COLD WATER PIPES

3.3.1.2. USE GRINNELL FIG. CT-121C FOR VERTICAL HOT AND COLD WATER PIPES

3.3.1.3. USE GRINNELL FIG. 260 FOR HORIZONTAL CAST IRON

3.3.1.4. USE GRINNELL FIG. 261 FOR VERTICAL CAST IRON

3.3.1.5. PROVIDE INSULATION SHIELDS FOR ALL HANGERS ON INSULATED PIPING.

3.3.2. BED SEWER PIPING ON 75mm LAYER OF SAND.

3.4. SPECIALTIES

3.4.1. DI-ELECTRIC UNIONS

3.4.1.1. PROVIDE ON ALL CONNECTIONS OF DISSIMILAR METALS.

3.4.1.1.1. ACCEPTABLE MATERIALS: WATTS 3001A SERIES OR APPROVED EQUAL.

3.5. VALVES AND GAUGES

3.5.1. GATE VALVES - CRANE #1320 OR APPROVED EQUAL.

3.5.2. BALL VALVES - CRANE #9322 OR APPROVED EQUAL.

3.5.3. GLOBE VALVE - CRANE #1312 OR APPROVED EQUAL.

3.5.4. CHECK VALVE - CRANE #1343 OR APPROVED EQUAL.

3.5.5. PRESSURE GAUGE - WEKSLER EA14 (0 - 690 kPa) OR APPROVED EQUAL.

3.5.6. THERMOMETER WITH WELL - WEKSLER EG5H9 (1°C - 82°C) OR APPROVED EQUAL.

3.6. TESTING

3.6.1. DRAINAGE PIPING SHALL BE PLUGGED AND THE ENTIRE PIPING SYSTEM SHALL BE FILLED WITH WATER UP TO THE TOP OF THE HIGHEST OPENING. WATER SHALL STAND AT THE SAME LEVEL FOR NOT LESS THAN 2 HOURS.

3.6.2. DOMESTIC WATER PIPING SHALL BE TESTED FOR 24 HOURS AT 862 kPa AND SHOW NO SIGNIFICANT PRESSURE DROP OR APPARENT LEAKS.

4. HEATING

4.1. GENERAL

4.1.1. ALL WORK SHALL BE COMPLETED IN ACCORDANCE WITH NBC, CSA, AND AUTHORITIES HAVING JURISDICTION (A.H.J.).

4.2. EQUIPMENT

4.2.1. UNIT HEATER SHALL BE INSTALLED IN ACCORDANCE WITH MANUFACTURER REQUIREMENTS.

4.3. HEAT TRACE

4.3.1. PROVIDE ELECTRIC HEAT TRACE ON PIPING SUBJECT TO FREEZING CONDITIONS.

4.3.2. HEAT TRACE SHALL BE SELF-REGULATING TYPE SUITABLE FOR APPLICATION.

4.3.3. PROVIDE COMPLETE SYSTEM INCLUDING CONTROLS, SENSORS, AND INSULATION.

4.3.4. COORDINATE POWER REQUIREMENTS WITH ELECTRICAL CONTRACTOR.

5. VENTILATION

5.1. GENERAL

5.1.1. ALL DUCTWORK AND HANGERS SHALL BE CONSTRUCTED FROM LOCK FORMING QUALITY STEEL WITH G90 DESIGNATION ZINC COATING TO ASTM A525 M80 TO SMACNA STANDARDS BASED ON 50mm SP. IN DUCTS. DUCTWORK TO BE SEALED TO SMACNA CLASS "C" STANDARDS.

5.1.2. CONTRACTOR RESPONSIBLE FOR ALL DUCT TRANSITIONS TO/FROM MECHANICAL EQUIPMENT, DIFFUSERS, GRILLES, CROSSOVERS, AROUND OBSTRUCTIONS, ETC., AS REQUIRED. PROVIDE FLEX CONNECTION TO EXHAUST FAN.

5.1.2.1. DUCTS UP TO 450mm MAY BE SUPPORTED WITH GALVANIZED STEEL STRAP HANGERS MANUFACTURED TO SMACNA STANDARDS, SCREWED AT THE TOP AND ON THE BOTTOM OF DUCT.

5.1.2.2. MATERIAL GAUGE AND REINFORCING MUST BE PROVIDED IN ACCORDANCE WITH SMACNA HVAC DUCT CONSTRUCTION. REINFORCEMENT SHALL BE APPLIED ON ALL FOUR SIDES AND FASTENED TOGETHER AT EACH CORNER BY WELDING, BOLTING OR RIVETING. SIDES OF DUCTS OVER 450mm WIDE SHALL BE STIFFENED BY CROSS BREAKING UNLESS THEY AIRE TO BE INSULATED OR LINED. DUCT SIZES SHOWN ON DRAWINGS ARE INTERIOR DIMENSIONS. WHEN ACOUSTIC INSULATION IS ADDED INSIDE OF DUCT, SIZES SHALL BE INCREASED ACCORDINGLY. SEAL ALL JOINTS AND CONNECTIONS WITH POLYMER TYPE, FLAME RESISTANT HIGH VELOCITY DUCT SEALING COMPOUND, DURO-DYNE S-2 OR EQUAL TO MAKE DUCTWORK AIRTIGHT.

GENERAL PLUMBING NOTES

1. ALL WORK SHALL BE PERFORMED IN ACCORDANCE WITH THE LATEST EDITION OF THE NATIONAL PLUMBING CODE, NBCC, AND ALL AUTHORITIES HAVING JURISDICTION (A.H.J.). PROVIDE FOR ALL TESTS, PERMITS, FEES AND INSPECTIONS REQUIRED BY A.H.J.
2. PROVIDE ALL SANITARY AND VENTING IN ACCORDANCE WITH THE LATEST EDITION OF THE NATIONAL PLUMBING CODE. COORDINATE ROOF PENETRATIONS WITH ARCHITECTURAL, STRUCTURAL, AND ROOFING REQUIREMENTS.
3. WATER CLOSETS TO HAVE DN7.5 ø SANITARY CONNECTIONS.
4. ALL DCW AND DHW TO BE TYPE L COPPER OR PEX AS PER SPECIFICATIONS.
5. INSULATE DOMESTIC WATER PIPING IN ACCORDANCE WITH SPECIFICATIONS. PROVIDE PVC JACKET OR ALL-SERVICE JACKET IN EXPOSED AREAS. SEAL ALL JOINTS IN ACCORDANCE WITH MANUFACTURER'S REQUIREMENTS.
6. EXPOSED VISIBLE FIXTURE SUPPLIES, STOPS, TAILPIECES, AND TRAPS IN FINISHED AREAS SHALL BE CHROME-PLATED UNLESS OTHERWISE NOTED.
7. INSTALL ESCUTCHEONS WHERE PIPES PASS THRU WALLS, FLOORS, ETC. AS REQUIRED.
8. COORDINATE FULLY ALL WORK WITH GENERAL CONTRACTOR AND ALL OTHER TRADES.
9. PROVIDE ALL PIPING OFFSETS AS REQ'D TO FACILITATE ON SITE COORDINATION.
10. COORDINATE FINAL LOCATIONS WITH ARCHITECTURAL ELEVATIONS, MILLWORK, ACCESSIBILITY REQUIREMENTS, AND OWNER-SUPPLIED EQUIPMENT.
11. CONTRACTOR TO COORDINATE ALL INVERTS WITH GENERAL CONTRACTOR.
12. ALL SANITARY PIPING TO BE SLOPED TO LATEST EDITION OF PLUMBING CODE.
13. ALL "EXPOSED" SANITARY PIPING TO BE METALLIC OR PVC XFR OR ALTERNATE MEETING 25-50 FLAME SMOKE REQUIREMENTS.
14. CONTRACTOR SHALL VERIFY ALL EXISTING SITE CONDITIONS AND SERVICE LOCATIONS PRIOR TO COMMENCING WORK.
15. ALL PIPING SYSTEMS SHALL BE PRESSURE TESTED AND INSPECTED IN ACCORDANCE WITH CODE PRIOR TO CONCEALMENT. DOMESTIC WATER SYSTEMS SHALL BE FLUSHED, TESTED, DISINFECTED WHERE REQUIRED, AND DOCUMENTED PRIOR TO OCCUPANCY.
16. PROVIDE ISOLATION VALVES ON ALL MAJOR BRANCHES AND AT EACH PIECE OF EQUIPMENT AND AS SHOWN ON DRAWINGS.
17. ALL WORK SHALL BE INSTALLED IN A NEAT AND WORKMANLIKE MANNER IN ACCORDANCE WITH ACCEPTED INDUSTRY PRACTICES.
18. PROVIDE WATER HAMMER ARRESTORS AT QUICK-CLOSING VALVES, FLUSH VALVES, APPLIANCES, AND FIXTURE GROUPS IN ACCORDANCE WITH CODE, MANUFACTURER'S REQUIREMENTS, AND SPECIFICATIONS.
19. PROVIDE ALL EXCAVATION, BEDDING, BACKFILLING, COMPACTION, AND SURFACE RESTORATION REQUIRED FOR THE WORK OF THIS CONTRACT, UNLESS NOTED OTHERWISE. COORDINATE WITH GENERAL CONTRACTOR.
20. PROVIDE CLEANOUTS IN ACCORDANCE WITH CODE, AT BASES OF STACKS, CHANGES IN DIRECTION, ENDS OF RUNS, AND WHERE REQUIRED FOR ACCESSIBLE MAINTENANCE. COORDINATE FINAL LOCATIONS WITH ARCHITECTURAL FINISHES AND ACCESS REQUIREMENTS.
21. PROVIDE BACKWATER VALVES WHERE SHOWN OR REQUIRED BY CODE/A.H.J.. PROVIDE CLEANOUT ACCESS TO FINISHED FLOOR OR GRADE AND COORDINATE FINAL LOCATION WITH G.C.

GENERAL VENTILATION NOTES

1. ALL WORK SHALL BE PERFORMED IN ACCORDANCE WITH N.B.C.C., N.F.P.A., SMACNA DUCT STANDARDS AND ALL APPLICABLE CODES AND REGULATIONS UNDER AUTHORITIES HAVING JURISDICTION.
2. ALL DUCTWORK AND HANGERS SHALL BE CONSTRUCTED TO SMACNA STANDARDS BASED ON 500 Pa IN DUCTS. DUCTWORK TO BE SEALED TO SMACNA CLASS "A" STANDARDS.
3. ALL WORK SHALL BE COORDINATED WITH OTHER DIVISIONS.
4. CONTRACTOR IS RESPONSIBLE FOR ALL DUCT TRANSITIONS TO/FROM EXHAUST FANS, DIFFUSERS, GRILLES ETC. PROVIDE FLEX CONNECTIONS TO ALL AIR HANDLING EQUIPMENT.
5. PROVIDE DUCT INSULATION c/w FACTORY APPLIED FOIL SCRIM-KRAFT VAPOR JACKET ON ALL DUCTWORK AS PER SPECIFICATIONS.
6. CONTRACTOR TO REFER TO ARCHITECTURAL FINISH SCHEDULE FOR CEILING TYPES AND CEILING HEIGHTS. REFER TO ARCHITECTURAL CEILING PLAN FOR FINAL PLACEMENT OF ALL CEILING EQUIPMENT. WHERE PLACEMENT OF CEILING EQUIPMENT CONFLICTS ARISE WITH ARCHI, PLANS, ARCHI, PLANS SHALL GOVERN. PROVIDE ALL TRANSITIONS TO SUIT.
7. CONTRACTOR SHALL VERIFY ALL EXISTING SITE CONDITIONS, DIMENSIONS, AND SERVICE LOCATIONS PRIOR TO FABRICATION AND INSTALLATION.
8. SEAL ALL DUCT PENETRATIONS THROUGH BUILDING ENVELOPE TO MAINTAIN AIR AND VAPOUR BARRIER CONTINUITY.
9. PROVIDE BACKDRAFT DAMPERS ON ALL EXHAUST AND OUTDOOR AIR DUCTS AS REQUIRED.
10. ALL DUCTWORK SHALL BE INSTALLED TRUE TO LINE AND GRADE AND IN A NEAT AND WORKMANLIKE MANNER.

PLUMBING LEGEND

SANITARY (SAN)	
DOMESTIC COLD WATER (DCW)	
DOMESTIC HOT WATER (DHW)	
PRESSURE RELIEF VALVE	
L-?	FIXTURE TAG
	PIPE DROP
	PIPE RISER
	PIPE CONTINUATION
	TIE IN POINT (T.I.P.)
	ISOLATION VALVE
	BALL VALVE
	CHECK VALVE
	END CAP CLEAN OUT
	PIPE INSULATION
	FLOOR CLEAN OUT
	BALL VALVE

GENERAL MECHANICAL NOTES

1. ALL MECHANICAL WORK SHALL BE PERFORMED IN ACCORDANCE WITH THE LATEST ADOPTED EDITION OF THE NATIONAL BUILDING CODE, NATIONAL PLUMBING CODE, N.F.P.A., SMACNA DUCT STANDARDS AND ALL APPLICABLE CODES AND REGULATIONS UNDER AUTHORITIES HAVING JURISDICTION (A.H.J.).
2. REFER TO ARCH. DRAWINGS FOR LOCATIONS OF ALL FIRE RATED WALLS AND CEILINGS. PROVIDE FIRE DAMPERS/FIRESTOPPING AS REQ'D BY N.F.P.A. & LOCAL CODES.
3. GENERAL CONTRACTOR SHALL BE RESPONSIBLE TO PROVIDE FIRESTOPPING TO ALL PIPING. GENERAL CONTRACTOR SHALL PROVIDE FIRE STOPPING DONUTS REQUIRED FOR PLASTIC PIPING SYSTEM.
4. ALL WIRING 50V & UNDER BY THIS CONTRACTOR, ALL WIRING REQUIRED FOR MECHANICAL WORK THAT IS OVER 50V NOTED AS THE RESPONSIBILITY OF THIS CONTRACTOR MUST BE PERFORMED BY AN ELECTRICIAN. COORDINATE REQUIREMENTS WITH GENERAL CONTRACTOR.
5. COORDINATE WITH GENERAL CONTRACTOR FOR ALL EXCAVATION AND BACKFILLING, AS REQUIRED.
6. ALL EQUIPMENT MANUFACTURERS LISTED FORM THE STANDARD OF ACCEPTANCE FOR THE EQUIPMENT REQUIRED. ALTERNATE EQUIPMENT MAY BE SUBSTITUTED ONLY AFTER RECEIVING APPROVED EQUAL STATUS FROM THE ENGINEER. PROVIDE SHOP DRAWINGS ON ALL MAJOR EQUIPMENT. IF ALTERNATE EQUIPMENT IS APPROVED BY ENGINEER, ALL COSTS ASSOCIATED WITH ANY MODIFICATIONS, CHANGES, ETC. TO USE THE ALTERNATE EQUIPMENT SHALL BE THE RESPONSIBILITY OF THE CONTRACTOR. MATERIALS SUPPLIED BY THIS CONTRACTOR SHALL BE NEW AND OF FIRST QUALITY AND UNIFORM THROUGHOUT.
7. EXISTING FLOOR PLANS ARE ISSUED FOR INFORMATION ONLY. CONTRACTOR SHALL VISIT THE SITE TO VERIFY EXISTING EQUIPMENT, CONDITIONS AND SCOPE OF WORK PRIOR TO SUBMITTING TENDER. EXTRAS WILL NOT BE CONSIDERED BECAUSE ACTUAL CONDITION DIFFER FROM DRAWINGS AND ALL COSTS RELATING TO EXISTING SITE CONDITIONS MUST BE INCLUDED IN THE TOTAL TENDER PRICE.
8. PROVIDE ALL REQUIRED ACCESS FOR MAINTENANCE AND SERVICE OF MECHANICAL EQUIPMENT.
9. ALL WORK SHALL BE INSTALLED IN A NEAT AND WORKMANLIKE MANNER IN ACCORDANCE WITH ACCEPTED INDUSTRY PRACTICES.
10. CONTRACTOR SHALL VERIFY ALL DIMENSIONS AND SITE CONDITIONS PRIOR TO FABRICATION AND INSTALLATION.
11. ANY DISCREPANCIES BETWEEN DRAWINGS, SPECIFICATIONS, AND SITE CONDITIONS SHALL BE REPORTED TO THE ENGINEER PRIOR TO PROCEEDING WITH WORK.
12. PROVIDE START-UP AND COMMISSIONING OF ALL MECHANICAL EQUIPMENT IN ACCORDANCE WITH MANUFACTURER'S REQUIREMENTS.

COLES
Architecture + Engineering + Project Management

Coles Associates Ltd.
Suite 201, 85 Fitzroy Street
Charlottetown, PE Canada, C1A 1R6
Phone: (902) 368-2300
www.colesassociates.com

Seal: PROFESSIONAL ENGINEER — The Association of Professional Engineers of Prince Edward Island — Zhen Wang 5134 — 2026-11-05 — PROVINCE OF PRINCE EDWARD ISLAND

Client: Town of Three Rivers

Project Title: Heritage Museum Washroom & Walkway

564 Main St.
Montague, PE

Sheet Title: Specifications Sheet

Rev. No.:	Issued for:	Date: (YYYY-MM-DD)
0	Permit	2025-11-05

Scale: 1 : 100
Dm By: EME
Chk By: WZJ
Rev. No.: 0
Project Number: 261155
Drawing Number: M001

THIS DRAWING AND ALL COPYRIGHT THEREIN ARE THE SOLE AND EXCLUSIVE PROPERTY OF COLES ASSOCIATES LTD. REPRODUCTION OR USE OF THIS DRAWING IN WHOLE OR IN PART BY ANY FORM WHATSOEVER WITHOUT THE PRIOR WRIT

NOTE

1. PROVIDE VENT PIPING TO ALL FIXTURES PER LATEST EDITION OF N.P.C



1 / M002 SITE PLAN
1 : 100

PRELIMINARY ONLY NOT FOR CONSTRUCTION

COLES
Architecture + Engineering + Project Management

Coles Associates Ltd.
Suite 201, 85 Fitzroy Street
Charlottetown, PE, Canada, C1A 1R6
Phone: (902) 368-2300
www.colesassociates.com

Seal: PROFESSIONAL ENGINEER — Zyan Wang — 2124 — 2026-11-05 — PROVINCE OF PRINCE EDWARD ISLAND

Client: Town of Three Rivers

Project Title: Heritage Museum Washroom & Walkway

564 Main St.
Montague, PE

Sheet Title: SITE PLAN

Rev. No.:	Issued for:	Date: (YYYY-MM-DD)
0	Permit	2025-11-05

Scale: 1 : 100
Drn By: EME
Chk By: WZJ
Rev. No.: 0
Project Number: 261155
Drawing Number: M002

THIS DRAWING AND ALL COPYRIGHT THEREIN ARE THE SOLE AND EXCLUSIVE PROPERTY OF COLES ASSOCIATES LTD. REPRODUCTION OR USE OF THIS DRAWING IN WHOLE OR IN PART BY ANY FORM WHATSOEVER WITHOUT THE PRIOR WRITTEN CONSENT OF COLES ASSOCIATES LTD. IS STRICTLY PROHIBITED.

NOTE

1. SANITARY PIPING ROUTE WITHIN FLOOR JOIST SPACE, IN BETWEEN JOISTS. ENSURE MINIMUM 4" OF INSULATION BELOW THE PIPE, AND NO INSULATION BETWEEN FLOOR AND PIPE
2. DOMESTIC HOT AND COLD WATER PIPING ROUTE WITHIN FLOOR JOIST SPACE. ENSURE MINIMUM 4" OF INSULATION BELOW THE PIPE, AND NO INSULATION BETWEEN FLOOR AND PIPE
3. PROVIDE VENT PIPING TO ALL FIXTURES PER LATEST EDITION OF N.P.C

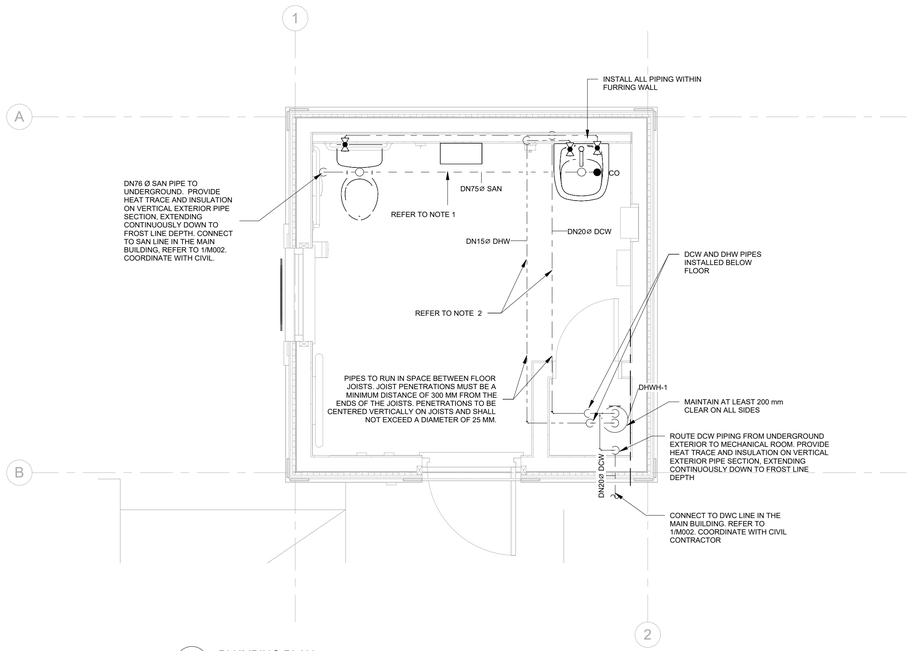

1 M100 PLUMBING PLAN
1 : 25

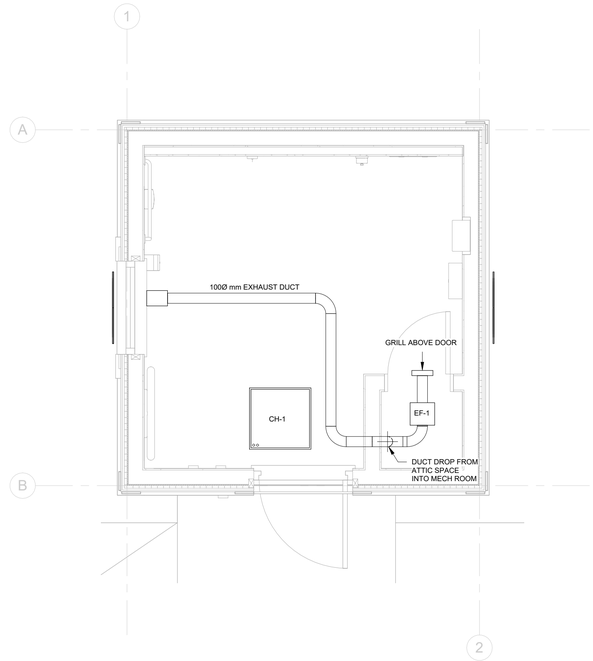

2 M100 VENTILATION PLAN
1 : 25

PRELIMINARY ONLY NOT FOR CONSTRUCTION

COLES
Architecture + Engineering + Project Management

Coles Associates Ltd.
Suite 201, 85 Fitzroy Street
Charlottetown, PE, Canada, C1A 1R6
Phone: (902) 368-2300
www.colesassociates.com

Seal: PROFESSIONAL ENGINEER — The Association of Professional Engineers of Prince Edward Island — Zyan Wang — 1124 — 2026-11-05 — PROVINCE OF PRINCE EDWARD ISLAND

Client: Town of Three Rivers

Project Title: Heritage Museum Washroom & Walkway

564 Main St.
Montague, PE

C0A 1R0

Sheet Title: Plumbing and Ventilation Sheet

Rev. No.:	Issued for:	Date: (YYYY-MM-DD)
0	Permit	2025-11-05

Scale: As indicated
Drn By: EME
Chk By: WZJ
Rev. No.: 0
Project Number: 261155
Drawing Number: M100

THIS DRAWING AND ALL COPYRIGHT THEREIN ARE THE SOLE AND EXCLUSIVE PROPERTY OF COLES ASSOCIATES LTD. REPRODUCTION OR USE OF THIS DRAWING IN WHOLE OR IN PART BY ANY FORM WHATSOEVER WITHOUT THE PRIOR WRITTEN CONSENT OF COLES ASSOCIATES LTD. IS STRICTLY PROHIBITED.

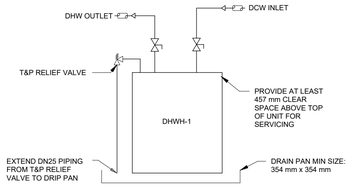

1 M101 DOMESTIC HOT WATER HEATER
N.T.S.

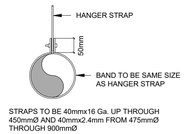

2 M101 HANGER FOR DUCTS
N.T.S.

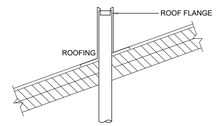

3 M101 PLUMBING VENT DETAIL
N.T.S.

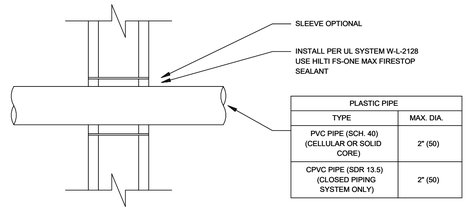

PLASTIC PIPE	
TYPE	MAX. DIA.
PVC PIPE (SCH. 40) (CELLULAR OR SOLID CORE)	2" (50)
CPVC PIPE (SDR 13.5) (CLOSED PIPING SYSTEM ONLY)	2" (50)

4 M101 PLASTIC PIPE THRU GYPSUM WALL ASSEMBLY
N.T.S.

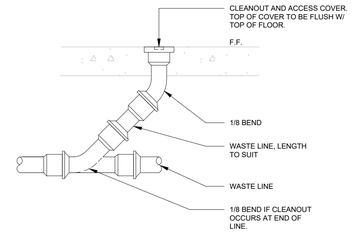

5 M101 FLOOR CLEANOUT
N.T.S.

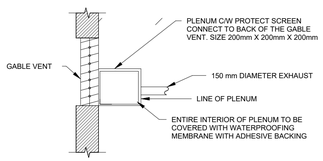

6 M101 EXHAUST PLENUM DETAIL
N.T.S.

DOMESTIC HOT WATER HEATER SCHEDULE

TAG	MODEL	POWER (W)	VOLTAGE (V)	CAPACITY (L)	WEIGHT (KG)	RECOVERY AT 50º C RISE (L/HR)	NOTES
DHWH-1	BRADFORD WHITE POWERFUL COMPACT (PC) RE1-2U6	1500	120	7	6	26	CONTRACTOR SHALL SUPPLY WITH AUXILIARY CATCH PAN CONFORM TO CODE. CONTRACTOR SHALL INSULATE HOT AND COLD PIPES, 610mm FOR WATER HEATER. INSTALLATION SHALL BE COMPLETED IN ACCORDANCE WITH MANUFACTURER'S INSTRUCTIONS AND AHJ REQUIREMENTS

PLUMBING FIXTURE SCHEDULE

TAG	FIXTURE	DHW	DCW	WASTE	TRIM	FIXTURE	NOTES
L-1	WASHROOM LAVATORY	15	15	40	DELTA 2523 HDF	KOHLER K2699-4	C/W OFFSET P-TRAP ASSEMBLY WITH CLEANOUT, GRID STRAINER, THERMOSTATIC MIXING VALVE, 1/4 TURN WALL STOP VALVES, 2 GPM FLOW, PROVIDE CONCEALED WALL CARRIER, SHROUD, INSULATED TRAP/SUPPLY PROTECTORS, RIGID SUPPLIES, 5" CHROME STUBBS, ESCUTCHEON, MIXING VALVE TO BE CONCEALED IN WALL WITH ACCESS HATCH.
WC-1	WATER CLOSET	15	-	60	-	KOHLER K-3999	TANK TYPE WATER CLOSET, 1.28GPF, TWO PIECES, ELONGATED, BARRIER FREE. PROVIDE WATER STOP, WAXLESS RING,OPEN FRONT SEAT WITH LID (CENTOCO AM500STSCC), SST HARDWARE

SEWAGE EJECTOR PUMP SCHEDULE

TAG	Model	FULL LOAD POWER (W)	MAX FLOW RATE (L/MIN)	POWER (V/ϕ/Hz)	NOTES
SP-1	LITTLE GIANT 9JF2V2D	870	378.5	115/1/60	SINGLE POINT FLOW CONTROLLED, BURIED AND INSTALL PER MANFACTURER'S INSTRUCTIONS AND DRAWINGS.

EXHAUST FAN SCHEUDLE

TAG	MODEL	AIRFLOW (L/S)	SPEED (RPM)	POWER (V/ϕ/Hz)	MOTOR POWER (kW)	STATIC PRESSURE (Pa)	NOTES
EF-1	FANTECH PB110 40568	23.6	2920	115/1/60	0.025	74.7	FAN SHALL BE WIRED TO LIGHT SWITCH CIRCUIT.

CEILING HEATER SCHEDULE

TAG	Model	AIRFLOW (L/S)	WEIGHT (KG)	POWER (V/ϕ/Hz)	HEATING CAPACITY (W)	NOTES
CH-1	STELPRO DRAGON DRI0221TW	118	7.2	240/1/60	2000	INCLUDE BUILT-IN THERMOSTAT. CONTRACTOR TO INSTALL AT LEAST 305 mm AWAY FROM THE WALLS.

PRELIMINARY ONLY NOT FOR CONSTRUCTION

COLES
Architecture + Engineering + Project Management
Coles Associates Ltd.
Suite 201, 85 Fitzroy Street
Charlottetown, PE, Canada, C1A 1R6
Phone: (902) 368-2300
www.colesassociates.com

Seal: PROFESSIONAL ENGINEER — Zuyin Wang — 2174 — 2026-11-05 — PROVINCE OF PRINCE EDWARD ISLAND

Client: Town of Three Rivers

Project Title: Heritage Museum Washroom & Walkway

564 Main St.
Montague, PE

Sheet Title: Details and Schedules

Rev. No.:	Issued for:	Date: (YYYY-MM-DD)
0	Permit	2025-11-05

Scale: 1 : 100
Drn By: EME
Chk By: WZJ
Rev. No.: 0
Project Number: 261155
Drawing Number: M101

THIS DRAWING AND ALL COPYRIGHT THEREIN ARE THE SOLE AND EXCLUSIVE PROPERTY OF COLES ASSOCIATES LTD. REPRODUCTION OR USE OF THIS DRAWING IN WHOLE OR IN PART BY ANY FORM WHATSOEVER WITHOUT THE PRIOR WRITTEN CONSENT OF COLES ASSOCIATES LTD. IS STRICTLY PROHIBITED.

ELECTRICAL SPECIFICATIONS

1. GENERAL CONDITIONS

1.1. TENDER REQUIREMENTS, THE PROJECT CONTRACT, RELATED DOCUMENTATION AND GENERAL REQUIREMENTS GOVERN THE WORK OF THIS CONTRACT/TRADE.

1.2. ALL ELECTRICAL WORK IS TO BE CARRIED OUT BY QUALIFIED, LICENSED ELECTRICIANS OR APPRENTICES FOR THE PROVINCE OF PRINCE EDWARD ISLAND AND THE ELECTRICAL CONTRACTOR MUST HAVE A VALID CONTRACTOR LICENSE ISSUED BY THE PROVINCE OF PRINCE EDWARD ISLAND.

1.3. ELECTRICAL CONTRACTOR TO FURNISH ALL LABOUR, MATERIALS, TOOLS AND EQUIPMENT REQUIRED TO COMPLETE ALL WORK SHOWN ON THE DRAWINGS AND HEREIN SPECIFIED. THE WORK IS TO BE IN ACCORDANCE WITH RULES AND REGULATIONS OF ALL AUTHORITIES HAVING LEGAL JURISDICTION OVER THE WORK. PROVIDE ANY SMALL ITEMS OF WORK NOT SPECIFICALLY CALLED FOR BUT REQUIRED TO COMPLETE THE INTENDED INSTALLATION.

1.4. THE TERM "OWNER" TO HEREIN AFTER REFER TO TOWN OF THREE RIVERS. THE TERM "ENGINEER" TO HEREIN AFTER REFER TO COLES ASSOCIATES LTD.

1.5. THE ENGINEER RESERVES THE RIGHT TO APPROVE THE QUALITY OF MATERIAL AND WORKMANSHIP, AND TO CALL FOR ANY TESTS WHICH THEY DEEM NECESSARY TO ESTABLISH THE INTEGRITY OF THE INSTALLATION DURING THE PROGRESS OF THE WORK AND A COMPLETE TEST OF EACH SYSTEM AT THE COMPLETION OF THE WORK. THE COST OF SUCH TESTS ARE NOT TO BE CONSIDERED AS EXTRAS.

2. DESCRIPTION OF WORK

2.1. THE WORK IS TO CONSIST OF, BUT NOT BE LIMITED TO, THE FOLLOWING:

2.1.1. POWER DISTRIBUTION INCLUDING MODIFICATIONS TO EXISTING SYSTEM

2.1.2. WIRING DEVICES

2.1.3. LIGHTING

2.1.4. EMERGENCY LIGHTING

2.1.5. ACCESS CONTROL

2.1.6. POWER, DISCONNECTS FOR MECHANICAL MOTORS AND EQUIPMENT

2.1.7. ALL CABLE AND CONDUIT INSTALLATION

2.1.8. ALL NECESSARY CONNECTIONS FOR A COMPLETE SYSTEM

3. CODES, PERMITS AND INSPECTION

3.1. ALL WORK IS TO BE IN ACCORDANCE WITH THE LATEST ADOPTED EDITION OF THE CANADIAN ELECTRICAL CODE (CSA 22.1-24), THE NATIONAL BUILDING CODE (NBCC 2020), AND THE NATIONAL FIRE CODE (NFC).

3.2. ELECTRICAL CONTRACTOR TO BE RESPONSIBLE FOR AND IS TO OBTAIN ALL PERMITS, INSPECTIONS, ETC. AS REQUIRED BY ALL AUTHORITIES HAVING JURISDICTION OVER THIS WORK AND IS TO PAY FOR SAME. THESE COSTS ARE TO BE INCLUDED IN THE TENDER PRICES. ALL PERMITS ARE TO BE DELIVERED TO THE OWNER'S REPRESENTATIVE AS SOON AS THEY BECOME AVAILABLE.

4. DRAWINGS

4.1. PREPARE AT OWN EXPENSE, ANY LARGE SCALE WORKING DRAWINGS WHICH MAY BE REQUIRED BY THE EXAMINING AUTHORITIES TO FACILITATE INSTALLATION,

5. AS-BUILT DRAWINGS

5.1. PROVIDE AS-BUILT DRAWINGS TO GENERAL REQUIREMENTS.

6. SHOP DRAWINGS

6.1. SUBMIT SHOP DRAWINGS OF ALL ELECTRICAL EQUIPMENT FOR REVIEW BY THE ENGINEER. SHOP DRAWINGS ARE TO INCLUDE PANELBOARDS AND ASSOCIATED BRANCH CIRCUIT BREAKERS, WIRING DEVICES, LIGHTING, ACCESS CONTROL, HEAT-TRACE CABLE SYSTEM AND ANY OTHER EQUIPMENT REQUESTED BY THE ENGINEER. CONTRACTOR IS TO STAMP, SIGN AND DATE SHOP DRAWINGS PRIOR TO SUBMISSION AS PROOF OF THEIR APPROVAL, COORDINATION WITH FIELD MEASUREMENTS, AND COMPLIANCE WITH THE CONTRACT DOCUMENTS.

7. EXAMINATION OF SITE AND DRAWINGS

7.1. EXAMINE ARCHITECTURAL, STRUCTURAL, MECHANICAL, CIVIL AND ELECTRICAL DRAWINGS, VISIT THE SITE AND BECOME FAMILIAR WITH THE PROJECT. ANY DEVIATION AND/OR CONFLICTS ON THE PLANS OR SITE IS TO BE REPORTED TO THE ENGINEER PRIOR TO SUBMITTING TENDER, OTHERWISE IT WILL BE CONSIDERED THAT THEY HAVE BEEN ACCOUNTED FOR IN TOTAL TENDERED PRICE.

8. CONSTRUCTION SCHEDULE

8.1. SCHEDULE AND PERFORM WORK TO MEET THE COMPLETION SCHEDULE, ANY OVERTIME WORK IS TO BE INCLUDED IN TOTAL TENDERED PRICE.

9. BILLINGS, REVISIONS AND EXTRAS

9.1. BILLINGS FOR WORK ARE TO BE BROKEN DOWN INTO A NUMBER OF SUBSECTIONS TO INDICATE HOW VALUES WERE DERIVED. SUBMIT PROPOSED BREAKDOWN TO ENGINEER FOR APPROVAL, PRIOR TO FIRST BILLING. MATERIALS ON SITE TO BE SUPPORTED WITH PACKING SLIPS.

9.2. NO ADDITIONAL MONEY OVER THE CONTRACT PRICE WILL BE PAID UNLESS AN APPROVED CHANGE ORDER IS ISSUED. CLAIMS FOR EXTRAS MUST BE SUBMITTED WITH A COMPLETE BREAKDOWN OF MATERIAL, LABOUR, HOURLY RATES, ETC.

10. CLEANUP

10.1. REMOVE ALL WASTE PRODUCTS AND DEBRIS AND KEEP THE WORK AREA CLEAN AT ALL TIMES.

10.2. PRIOR TO FINAL REVIEW REMOVE SURPLUS PRODUCTS, TOOLS, AND CONSTRUCTION EQUIPMENT.

11. CUTTING AND PATCHING

11.1. BE RESPONSIBLE FOR ANY CUTTING, PATCHING AND OPENINGS NECESSARY FOR WORK. USE APPROPRIATE POWER DRIVEN TOOLS TO MAKE ANY OPENINGS. KEEP OPENINGS TO A MINIMUM, AND MAKE OPENINGS ONLY AS LARGE AS REQUIRED FOR ELECTRICAL SERVICES.

11.2. PATCH, CAULK, AND SEAL AROUND OPENINGS PLACED THROUGH FULL HEIGHT WALLS TO REDUCE NOISE.

12. EXISTING STRUCTURES AND SERVICES

12.1. CONTRACTOR TO BE RESPONSIBLE FOR ANY DAMAGE CAUSED BY CUTTING OR DISRUPTING EXISTING STRUCTURES OR SERVICES DESIGNATED TO REMAIN IN USE.

13. VAPOUR BARRIER PENETRATIONS

13.1. EVERY OUTLET AND JUNCTION BOX INSTALLED IN A WALL OR CEILING WHICH IS EQUIPPED WITH, OR MAY BE EQUIPPED WITH A VAPOUR BARRIER, IS TO BE SURROUNDED WITH A MOISTURE RESISTANT BARRIER.

13.2. OPENINGS PLACED THROUGH VAPOUR BARRIERS FOR THE INSTALLATION OF ELECTRICAL WIRING, OUTLET BOXES AND EQUIPMENT ARE TO BE EFFECTIVELY SEALED TO MAINTAIN THE INTEGRITY OF THE VAPOUR BARRIER.

14. DELIVERY DATES

14.1. PLACE ORDER FOR ALL MATERIAL AND EQUIPMENT IMMEDIATELY AFTER SIGNING OF CONTRACT. SUBMIT A LIST OF DELIVERY DATES FOR EACH TYPE OF EQUIPMENT WITHIN 5 DAYS OF THE AWARD OF CONTRACT. THE LIST IS TO INCLUDE SUPPLIERS AND MANUFACTURERS NAMES, USE ONLY MATERIALS THAT CAN BE DELIVERED ON TIME TO MEET CONSTRUCTION SCHEDULE, OTHERWISE PROVIDE TEMPORARY AT NO COST TO OWNER.

15. EQUIPMENT AND MATERIAL

15.1. ALL EQUIPMENT AND MATERIAL, UNLESS SPECIFICALLY NOTED OTHERWISE, IS TO BE NEW AND WITHOUT BLEMISH OR DEFECT. ALL MATERIAL AND EQUIPMENT ARE TO BE CERTIFIED BY A CERTIFICATION AGENCY WHICH IS ACCREDITED BY THE CANADIAN STANDARDS COUNCIL OF CANADA IN ACCORDANCE WITH THE REQUIREMENTS OF CSA STANDARDS OR OTHER RECOGNIZED DOCUMENTS AND HAVE ALL REQUIRED LABELS PERMANENTLY AFFIXED AND VISIBLE WHEN INSTALLED.

16. TESTING

16.1. PERFORM TEST ON EACH SYSTEM TO THE SATISFACTION OF THE ENGINEER AND SUBMIT TEST RESULTS FOR APPROVAL PRIOR TO THE FINAL ACCEPTANCE OF THE WORK.

16.2. NEW AND EXISTING PANELBOARDS ARE TO BE BALANCED WITHIN 5%. MEASURE PHASE CURRENT TO PANELS WITH NORMAL LOADS OPERATING AT TIME OF ACCEPTANCE. ADJUST BRANCH CIRCUIT CONNECTIONS AS REQUIRED TO OBTAIN BEST BALANCE OF CURRENT BETWEEN PHASES AND RECORD CHANGES. INCLUDE SIGNED AND DATED LOAD BALANCE SHEETS IN MAINTENANCE MANUALS.

16.3. MEGGAR ALL NEW CIRCUITS PHASE-TO-PHASE-TO-GROUND. INCLUDE SIGNED AND DATED TEST SHEETS IN MAINTENANCE MANUALS.

16.4. ALL NEW POWER AND CONTROL CABLES TO BE TESTED FOR OPENS, SHORTS, GROUNDS AND CONTINUITY. INCLUDE SIGNED AND DATED TEST SHEETS IN MAINTENANCE MANUALS.

16.5. ALL ELECTRICAL EQUIPMENT AND SYSTEMS TO BE COMMISSIONED BY ELECTRICAL CONTRACTOR, READY FOR USE BY OWNER.

16.6. AT COMPLETION OF WORK SUBMIT WITH THE MAINTENANCE MANUALS A REPORT LISTING PHASE AND NEUTRAL CURRENTS ON NEW AND MODIFIED PANELBOARDS, OPERATING UNDER NORMAL LOAD. STATE HOUR AND DATE WHICH EACH LOAD WAS MEASURED AND VOLTAGE AT TIME OF TEST.

17. DEMONSTRATION OF THE SYSTEM

17.1. DEMONSTRATE THE FUNCTION AND OPERATION OF EACH SYSTEM TO THE ENGINEER AND OWNER.

18. IDENTIFICATION

18.1. PROVIDE AND INSTALL LAMICOID IDENTIFICATION NAMEPLATES ON ALL NEW ELECTRICAL EQUIPMENT, INCLUDING BUT NOT LIMITED TO DISCONNECT SWITCHES, PANELBOARDS, ETC. INDICATING THE LOAD SERVED, SYSTEM AMPERAGE, VOLTAGE, PHASING AND CIRCUIT NUMBER WHERE APPLICABLE.

18.2. LAMICOID NAMEPLATES ARE TO BE WHITE WITH BLACK ENGRAVED LETTERS AND ARE TO BE INSTALLED WITH CONTACT CEMENT TO EQUIPMENT ENCLOSURES.

18.3. EACH NEW BRANCH PANEL IS TO HAVE A TYPEWRITTEN BREAKER DIRECTORY INDICATING THE LOAD CONNECTED TO EACH CIRCUIT. DIRECTORIES ARE TO BE MOUNTED ON THE INSIDE OF THE PANEL DOOR WITH A TRANSPARENT PLASTIC COVER. EXISTING PANELBOARDS TO HAVE EXISTING PANEL DIRECTORIES UPDATED BASED ON THE NEW CIRCUITS ADDED IN ACCORDANCE WITH CSA 22.1-24 ARTICLE 2-100 (4).

18.4. EACH WIRE TO HAVE SELF-LAMINATING OR HEAT SHRINK STYLE CABLE MARKER INDICATING THE CIRCUIT NUMBER IT IS CONNECTED TO.

18.5. ALL JUNCTION/PULL BOXES ARE TO BE MARKED WITH AN INDELIBLE INK MARKER TO IDENTIFY THE CIRCUIT NUMBER OF ENCLOSED WIRING AND THE PANEL NAME.

19. COORDINATION

19.1. BE RESPONSIBLE FOR COORDINATING THE INSTALLATION OF EQUIPMENT, CONDUIT AND CABLE WORK, LIGHTING FIXTURES, ETC. WITH OTHER TRADES PRIOR TO THE ACTUAL INSTALLATION.

20. ACCESSIBILITY

20.1. ALL WORK IS TO BE INSTALLED SO IT CAN BE READILY ACCESSIBLE FOR OPERATION, MAINTENANCE AND REPAIRS.

21. RESPONSIBILITY

21.1. BE RESPONSIBLE FOR WORK UNTIL THE COMPLETION AND FINAL ACCEPTANCE, INCLUDING REPLACING ANY ITEM THAT MAY BE DEFECTIVE, DAMAGED, LOST OR STOLEN WITHOUT ADDITIONAL COST TO THE OWNER OR DELAY TO THE COMPLETION OF THE PROJECT.

22. WARRANTY

22.1. WARRANT ALL WORK AND MATERIALS INSTALLED UNDER THIS CONTRACT, AGAINST ALL DEFECTS AND WORKMANSHIP FOR A PERIOD OF ONE (1) YEAR AFTER ACCEPTANCE OF SAME BY OTHERS.

23. FASTENINGS AND SUPPORTS

23.1. PROVIDE FASTENINGS AND SUPPORTS SPECIFICALLY DESIGNED TO SUPPORT THE LOAD FOR ALL ELECTRICAL EQUIPMENT.

23.2. SUPPORT CHANNELS TO BE U-SHAPED, 41mm x 41mm x 2.6mm THICK, PRE-GALVANIZED STEEL, SURFACE MOUNTED OR SUSPENDED AS REQUIRED. THREADED ROD, NUTS AND WASHERS TO BE ZINC PLATED.

23.3. SPECIFIC PURPOSE HEAT TREATED, SPRING STEEL FASTENERS TO SUPPORT BOXES, CONDUIT AND CABLE FROM MAIN STRUCTURES AND CHANNELS. ACCEPTABLE MATERIAL: COOPER B-LINE; CADDY.

23.4. SURFACE MOUNTED EQUIPMENT REQUIRING ADDITIONAL SUPPORT TO BE INSTALLED USING METAL FRAMING CHANNELS, FITTINGS AND HARDWARE.

23.5. BOXES INSTALLED IN STUD WALLS ARE TO BE SUPPORTED BETWEEN STUDS USING SPECIFIC PURPOSE BOX SUPPORTS. ACCEPTABLE MATERIAL: COOPER B-LINE, CADDY.

23.6. PROVIDE METAL BRACKETS, FRAMES, HANGERS, CLAMPS AND RELATED TYPES OF SUPPORT AS REQUIRED TO SUPPORT CONDUIT AND CABLE. DO NOT USE TY-WRAPS OR ZIP TIES.

23.7. ENSURE ADEQUATE SUPPORT FOR RACEWAYS AND CABLES DROPPED VERTICALLY. PROVIDE CHANNEL AS REQUIRED.

23.8. DO NOT USE SUPPORTS OR EQUIPMENT INSTALLED BY OTHER TRADES FOR CONDUIT OR CABLE SUPPORT UNLESS APPROVAL IS OBTAINED FROM THE ENGINEER.

23.9. USE MULTI-CABLE MANAGEMENT BRACKETS TO SUPPORT MULTIPLE ARMOURED, CONTROL, AND NON-METALLIC SHEATHED CABLES IN BUNDLED ROUTING APPLICATIONS, RIGID PLASTIC, UL/ULC LISTED. ACCEPTABLE MATERIAL: RACK-A-TIERS H2 HOMER HELPER.

24. CONDUIT AND FITTINGS

24.1. WHEN SHOWN, CONDUIT SIZES ARE TO BE AS INDICATED ON THE DRAWINGS AND ARE NOT TO BE REDUCED IN SIZE UNLESS APPROVAL IS OBTAINED FROM THE ENGINEER; OTHERWISE, SIZE CONDUIT TO CSA 22.1-24 REQUIREMENTS. CONDUIT INSTALLED IN FINISHED AREAS IS TO BE CONCEALED WHERE POSSIBLE. ALL CONDUIT IS TO BE INSTALLED PARALLEL OR PERPENDICULAR TO BUILDING LINES. CONDUIT IS TO BE INSTALLED TO CONSERVE HEADROOM IN SPACES THROUGH WHICH THEY PASS.

24.2. EMT COMPLETE WITH STEEL SET SCREW COUPLINGS AND CONNECTORS TO BE USED FOR ALL BRANCH CIRCUIT WORK UNLESS OTHERWISE INDICATED. INSTALL A SEPARATE BOND WIRE SIZED IN ACCORDANCE WITH CEC REQUIREMENTS IN ALL CONDUITS.

24.2.1. ARMOURED CABLE (AC90) IS AN ACCEPTABLE ALTERNATE TO CONDUIT FOR INTERIOR BRANCH CIRCUITS CONCEALED IN STUD WALL CONSTRUCTION.

24.3. PVC CONDUIT TO BE USED UNDERGROUND AND WHERE ALLOWED BY SECTION 12 OF THE CSA 22.1-24. UNLESS OTHERWISE INDICATED, EXPOSED PVC WILL NOT BE PERMITTED.

24.4. WHERE CONDUIT PENETRATES THROUGH FIRE RATED STRUCTURES, FIREPROOFING AND SMOKE SEALING IS TO BE PACKED AROUND CONDUIT TO MAINTAIN FIRE RATING OF STRUCTURE WHICH IT PASSES THROUGH. ACCEPTABLE MATERIAL: 3M BRAND FIRE BARRIER CAULK CP 25 OR 303 PUTTY COMPOUND OR APPROVED EQUAL. PROVIDE FIRE COLLARS IN ADDITION TO FIRE CAULKING WHERE REQUIRED.

24.5. MINIMUM CONDUIT SIZE IS TO BE 21mm UNLESS OTHERWISE INDICATED.

24.6. FOR EXTERIOR AND WET LOCATIONS USE LIQUID TIGHT FLEX OR TECK CABLE WITH PROPER FITTINGS.

24.7. CONDUIT AND ARMOURED CABLES ARE TO BE SUPPORTED INDEPENDENTLY OF OTHER EQUIPMENT USING ONE-HOLE STEEL STRAPS FOR UNDER 53mmC, TWO-HOLE STEEL STRAPS FOR 53mmC AND LARGER, AND BEAM CLAMPS, AND SPRING STEEL FASTENERS IN ACCORDANCE WITH THE CEC.

24.7.1. WILL BE CONSIDERED AS AN ALTERNATE FOR ARMOURED CABLE (AC90) IN WOODEN STUD WALLS OR WOOD STRUCTURES AND IS TO BE FASTENED WITH STEEL CABLE STAPLES.

24.8. PROVIDE LOW VOC MASTIC COMPOUND WEATHERPROOF SEAL WHERE CONDUITS PASS THROUGH EXTERIOR WALLS OR STRUCTURES.

25. OUTLET, PULL AND JUNCTION BOXES

25.1. BOXES TO BE CODE GAUGE STEEL, SIZED TO MEET CSA 22.1-24 REQUIREMENTS AND SUITABLE FOR FLUSH MOUNTING FOR THE TYPE OF CONSTRUCTION.

25.2. EXTERIOR BOXES TO BE WATERTIGHT.

25.3. BOXES TO BE SUPPORTED INDEPENDENT OF CONDUIT OR CABLE RUNS.

26. INSTALLATION OF ELECTRICAL

26.1. PLANS SHOW APPROXIMATE LOCATION OF ELECTRICAL WORK. EXACT LOCATION TO BE COORDINATED ON THE SITE WITH OTHER TRADES, ARCHITECTURAL PLANS, EQUIPMENT, ETC. LOCATIONS MAY VARY BY 3m WITHOUT CREDIT OR EXTRA. INACCURATELY LOCATED ELECTRICAL TO BE RE-ADJUSTED OR RELOCATED AT THE CONTRACTOR'S EXPENSE.

26.2. UNLESS OTHERWISE INDICATED ON THE DRAWINGS, LOCATE ELECTRICAL EQUIPMENT AT THE FOLLOWING MOUNTING HEIGHTS TAKEN FROM EQUIPMENT CENTERLINE TO FINISHED FLOOR.

26.2.1. RECEPTACLES: 457mm IN GENERAL OR 150mm ABOVE COUNTERTOP.

26.2.2. LIGHT SWITCHES: 1219mm

26.2.3. PANELBOARDS: 1524mm OR AS REQUIRED BY CODE.

26.2.4. POWER ASSISTED PUSHBUTTONS: 1066mm

26.2.5. WALL MOUNTED EXIT OR EMERGENCY LIGHTS: 2286mm

26.2.6. HAND DRYERS: 1066mm

26.2.7. KEY PADS: 1219mm

26.3. DO NOT INSTALL OUTLETS BACK-TO-BACK IN WALLS, ALLOW 153mm MINIMUM HORIZONTAL CLEARANCE BETWEEN BOXES. WHEN BOXES ARE INSTALLED WITHIN THE SAME STUD CAVITY, INSTALL VAPOUR BARRIER BOXES AND SEAL AROUND BOXES WITH ISOLATING EXPANSION FOAM. ACCEPTABLE MATERIAL: MONO CCMC No. 09421-R BY TREMCO.

27. WIRE AND CABLE

27.1. ALL WIRES TO BE COPPER RW90, RATED 600V, INSTALLED IN CONDUIT UNLESS OTHERWISE INDICATED. ARMOURED CABLE (AC90) OR NMD90 IN WOOD CONSTRUCTION IS AN ACCEPTABLE ALTERNATE TO CONDUIT FOR INTERIOR BRANCH CIRCUITS CONCEALED IN STUD WALL CONSTRUCTION.

27.2. ALL WIRING TO BE SIZED TO MEET ALL REQUIREMENTS OF THE CSA 22.1-24. MINIMUM SIZE FOR BRANCH CIRCUIT WIRING TO BE #12 AND #14 FOR CONTROL WIRING UNLESS INDICATED OTHERWISE.

27.3. ALL WIRES TO BE NEW AND DELIVERED TO THE SITE OF THE PROJECT IN THEIR ORIGINAL PACKING. WIRES #8 AND LARGER TO BE STRANDED, #10 AND SMALLER TO BE SOLID. WIRES TO BE FACTORY IDENTIFIED SHOWING SIZE, VOLTAGE RATING AND INSULATION TYPE.

27.4. NEUTRAL CONDUCTOR TO BE WHITE THROUGHOUT.

27.5. CABLES ARE TO BE INSTALLED WITHOUT SPLICES AND BE RUN CONTINUOUS FROM SOURCE TO LOAD.

28. CONNECTORS FOR WIRES

28.1. USE TWIST-ON PRESSURE TYPE WIRE CONNECTORS FOR #8 TO #14 SIZED WIRE CONNECTIONS. ACCEPTABLE MATERIAL: MARETTE

28.2. USE CRIMP STYLE ALLOY WIRE CONNECTORS, NYLON INSULATED FOR #16 AND SMALLER WIRES AND FOR CONNECTING SOLID TO STRANDED CONDUCTORS.

28.3. USE GEL FILLED TWIST-ON CONNECTORS IN DAMP OR WET LOCATIONS. ACCEPTABLE MATERIAL: KING INNOVATION DRY CONN.

29. GROUNDING AND BONDING

29.1. ENTIRE NEW AND MODIFIED ELECTRICAL SYSTEM TO BE GROUNDED AND BONDED IN ACCORDANCE WITH THE REQUIREMENTS OF THE CEC AND LOCAL AUTHORITIES.

29.2. ALL NEW CONDUITS TO HAVE SEPARATE INSULATED BONDING CONDUCTOR.

29.3. ALL INSULATED GROUNDING AND BONDING WIRES TO HAVE GREEN JACKET.

30. POWER DISTRIBUTION SYSTEM

30.1. DISCONNECT SWITCHES

30.1.1. HEAVY DUTY TYPE WITH RATING INDICATED ON THE DRAWINGS, QUICK-MAKE, QUICK-BREAK, AVOIDABLE COVER INTERLOCK, LOCKABLE IN "OFF" POSITION.

30.1.2. RATED TO WITHSTAND 6 TIMES THE CONTINUOUS CURRENT AT RATED VOLTAGE.

30.1.3. QUICK-MAKE, QUICK-BREAK ACTION WITH ON-OFF POSITION INDICATOR ON COVER AND PROVISION FOR PADLOCKING IN ON OR OFF POSITION.

30.1.4. CSA TYPE 1 ENCLOSURES.

30.2. PANELBOARDS

30.2.1. NEW PANELBOARD TO BE OF THE AMPERAGE, VOLTAGE AND PHASING INDICATED ON THE DRAWINGS, COMPLETE WITH CIRCUIT BREAKERS AS INDICATED.

30.2.2. NEW PANELBOARD TO BE FLUSH MOUNTED AS INDICATED COMPLETE WITH HINGED DOOR, LATCH, LOCK AND DIRECTORY, BAKED GREY ENAMEL FINISH.

30.2.3. CIRCUIT BREAKERS TO HAVE THERMAL MAGNETIC TRIP PROTECTION WITH BIMETALLIC ELEMENTS FOR DELAY OVERLOAD PROTECTION. TWO POLE BREAKERS TO HAVE INTERNAL COMMON TRIP. BREAKERS ARE TO BE BOLT-IN FIELD INTERCHANGEABLE, 10 KAIC AT 240V. PROVIDE ALL MOUNTING HARDWARE AS REQUIRED FOR INSTALLING NEW BREAKERS IN EXISTING PANELS. NEW BREAKERS INSTALLED IN EXISTING PANELS ARE TO HAVE THE SAME KAIC RATING AS THE PANEL IN WHICH THEY ARE BEING INSTALLED.

30.2.4. CIRCUIT BREAKERS TO BE BY THE SAME MANUFACTURER AS THE PANELBOARD IN WHICH THEY ARE BEING INSTALLED. BREAKERS MUST BE NEW, COMPLETE WITH ORIGINAL FACTORY WARRANTY AND SUPPLIED FROM AN AUTHORIZED MANUFACTURER'S DISTRIBUTOR.

30.2.5. ACCEPTABLE MATERIAL: SQUARE D, SIEMENS, EATON.

31. MECHANICAL AND SERVICE EQUIPMENT

31.1. ELECTRICAL CONTRACTOR TO SUPPLY AND INSTALL:

31.1.1. ALL ELECTRICAL PANELBOARDS.

31.1.2. ALL NECESSARY POWER WIRING AND CONDUIT TO EQUIPMENT LOCATIONS.

31.1.3. DISCONNECT SWITCHES AS INDICATED ON THE PLANS.

31.1.4. ALL NECESSARY POWER WIRING FROM THE DISCONNECT TO EQUIPMENT.

31.1.5. ALL POWER WIRING CONNECTIONS AND TERMINATIONS FOR VOLTAGES OF 120V OR GREATER.

31.1.6. ANY MISCELLANEOUS ITEMS NECESSARY TO COMPLETE THE WORK AS SHOWN ON DRAWINGS.

31.1.7. COORDINATE EXACT LOCATIONS WITH THE CONTRACTOR SUPPLYING THE EQUIPMENT, INSTALLATION MANUAL(S), AND RELATED DRAWINGS. VERIFY ELECTRICAL REQUIREMENTS AND CONNECTIONS PRIOR TO ROUGH-IN. LOCATION OF EQUIPMENT AND/OR CONNECTIONS MAY VARY IN THE FIELD BY 3m WITHOUT CREDIT OR EXTRA.

31.2. MECHANICAL CONTRACTOR TO SUPPLY AND INSTALL:

31.2.1. ALL CONTROL WIRING FOR VOLTAGES LESS THAN 120V.

32. WIRING DEVICES

32.1. DUPLEX RECEPTACLES TO BE WHITE, STANDARD, COMMERCIAL SPECIFICATION GRADE, 120V, 15A CSA 5-15R OR 20A CSA 5-20R AS INDICATED ON THE DRAWINGS WITH NYLON FACEPLATE. ACCEPTABLE MATERIAL: (CSA 5-15R) COOPER #625W, HUBBELL #CR15-WH1, LEVITON #CR15-WH1, PASS & SEYMOUR #PT26252W, (CSA 5-20R): COPPER #CR20-WH, HUBBELL #CR20-WH, LEVITON #CR20-WH, PASS & SEYMOUR #CR20-WH.

32.2. DUPLEX CSA TYPE 5-15R GROUND FAULT CIRCUIT INTERRUPTER (GFCI) RECEPTACLES TO BE WHITE, DECORA, COMMERCIAL SPECIFICATION GRADE, NYLON FACEPLATE C/W 0.025 SECONDS TRIP-TIME, 10,000A MAXIMUM INTERRUPTING CAPACITY INTEGRAL TEST BUTTON AND INDICATOR LIGHT. ACCEPTABLE MATERIAL: COOPER #VGF15-W, HUBBELL #GFRST15WNL; LEVITON #N7599-W; PASS & SEYMOUR #1595W.

32.3. WALL MOUNT PIR TECHNOLOGY OCCUPANCY SENSOR RATED 800W, 120V, FIELD ADJUSTABLE TIME-OUT AND CAPABLE OF SWITCH LIGHTS OR LIGHTS AND EXHAUST FAN AS INDICATED ON THE DRAWINGS, WHITE IN COLOUR, ACCEPTABLE MATERIAL: LUTRON #MS-OSP5-WH (LIGHTS & FAN), nLIGHT, COOPER, LEVITON.

32.4. COVERPLATES IN FINISHED AREAS TO BE SMOOTH UNBREAKABLE NYLON OR IMPACT RESIST THERMOPLASTIC, COLOR TO MATCH DEVICE; NUMBER OF GANG AS REQUIRED.

32.5. PROVIDE CIRCUIT IDENTIFICATION AT ALL WIRING DEVICES USING PRE-PRINTED THERMAL NON-SMEAR LABELS, CLEAR VINYL WITH BLOCK LETTERING, ATTACHED TO COVERPLATE. WHITE VINYL LABELS WILL NOT BE ACCEPTED.

32.6. RECEPTACLES DESIGNATED AS WEATHERPROOF TO BE GFCI TYPE C/W SPRING LOADED GASKETTED WHILE-IN-USE COVERS. ACCEPTABLE MATERIAL: HUBBELL TAYMAC ML SERIES; PASS & SEYMOUR #WIUC1OSG.

33. LUMINAIRES

33.1. PROVIDE LUMINAIRES AS INDICATED IN THE LUMINAIRE SCHEDULE AND/OR AS SPECIFIED IN THIS SECTION. LUMINAIRES TO BE C/W ALL NECESSARY HANGERS, LOUVERS, DIFFUSERS, SUPPORTS, ETC.

33.2. CO-ORDINATE THE MOUNTING AND LOCATION OF LUMINAIRES WITH OTHER TRADES TO AVOID CONFLICTS.

33.3. ALIGN LUMINAIRES IN CONTINUOUS ROWS TO FORM STRAIGHT UNINTERRUPTED LINE. ALIGN LUMINAIRES MOUNTED INDIVIDUALLY PARALLEL OR PERPENDICULAR TO BUILDING LINES.

34. EMERGENCY LIGHTS

34.1. EMERGENCY BATTERY TO BE RATED 36W FOR 30 MIN., 120V INPUT, 12V DC OUTPUT, WITH TWO 4W MR16 LED LAMPS, AUTO-TEST, WHITE HOUSING. ACCEPTABLE MATERIAL: AIMLITE #EBST1236-2MB4WLJWHT/ATD, LUMACELL #RG12S362LD7AT, READY-LITE #LDX1236AD2LD7, STANPRO #SLA1236-24WLJWH/AT. BATTERY TO HAVE A TEN YEAR UNCONDITIONAL PARTS AND LABOUR GUARANTEE.

34.2. INSTALL EMERGENCY LIGHTING AS INDICATED AND MAKE NORMAL AND EMERGENCY POWER CONNECTIONS. TEST EMERGENCY POWER FOR 30 MINUTES.

35. ACCESS CONTROL

35.1. THE ACCESS CONTROL SYSTEM TO GRANT ENTRY TO RESTRICTED AREAS. WHEN AN AUTHORIZED CARD IS PRESENTED TO THE CARD READER, THE ELECTRIC STRIKE IS UNLOCKED AND THE CARD HOLDER OPENS THE DOOR. EGRESS IS UNRESTRICTED, NO CARDS REQUIRED.

35.2. SUPPLY AND INSTALL ALL EQUIPMENT TO PROVIDE A COMPLETELY OPERATIONAL, ACCESS CONTROL SYSTEM. ALL SYSTEM COMPONENTS ARE TO BE FROM ONE MANUFACTURER. WHEN COMPONENTS ARE INCLUDED FROM SOURCES OTHER THAN THE MANUFACTURER OF THE SYSTEM, IT MUST BE VERIFIED AND GUARANTEED THAT THE COMPONENTS ARE COMPATIBLE AND WILL NOT VOID OR IMPAIR THE SYSTEM WARRANTY.

35.3. ACCESS CONTROL PANELS TO BE MICROPROCESSOR-BASED DIGITAL TECHNOLOGY FOR HIGH SPEED PROCESSING. PANELS TO USE DISTRIBUTED INTELLIGENCE SO THAT THEY WORK INDEPENDENTLY OF ONE ANOTHER. ALL DATABASE INFORMATION AND DECISION MAKING TO BE PERFORMED AT THE CONTROL PANEL. THE CONTROL PANEL TO PROVIDE A 12V DC, 7 AH BACK-UP BATTERY FOR UP TO 12-HOURS OF OPERATION UPON POWER LOSS. ACCEPTABLE MATERIAL: KANTECH KT-300/120-TAMP C/W KT-PCA204, TR1640P/CSA.

35.4. CARD READERS TO READ THE DATA FROM ACCESS CARDS AND TRANSMIT THE DATA TO THE CONTROL PANEL. A BEEP WILL SOUND AND THE RED LED WILL TURN OFF. THE GREEN LED WILL TURN ON AND THE ELECTRIC STRIKE WILL UNLOCK FOR AUTHORIZED CARDS. CARD READERS ARE TO BE MADE OF POLYCARBONATE MATERIAL, SUITABLE FOR FLUSH MOUNTING ON METAL DOOR FRAMES WITH A READ RANGE OF 6", OPERATING AT 12VDC. ACCEPTABLE MATERIAL: KANTECH SHADOW PROX #SH-Y1.

35.5. DOOR CONTACTS TO BE MAGNETIC WITH INTERNAL TAMPER SWITCH RECESSED IN METAL DOOR FRAMES FOR DETECTION WHEN THE DOOR IS OPEN. ACCEPTABLE MATERIAL: GE 1078CTW SERIES.

35.6. INSTALL ACCESS CONTROL SYSTEM AS INDICATED AND IN ACCORDANCE WITH MANUFACTURER'S INSTRUCTIONS. INSTALL WIRING AS PER MANUFACTURER'S RECOMMENDATIONS, ALL WIRING TO BE IN EMT CONDUIT. PROGRAM THE SYSTEM TO OWNER'S REQUIREMENTS.

35.7. ARRANGE AND INCLUDE TWO EIGHT-HOUR SITE VISITS BY THE MANUFACTURER'S TECHNICAL REPRESENTATIVE TO COMMISSION, PROGRAM AND DEMONSTRATE THE OPERATION OF THE SYSTEM, INCLUDING PREPARING CARD HOLDER DATABASE AND CARD MAKING, AND ANSWER ANY QUESTIONS. PROVIDE MANUFACTURER'S VERIFICATION CERTIFICATE IN MAINTENANCE MANUALS.

36. HEAT TRACE CABLE

36.1. PROVIDE SELF-REGULATING HEAT-TRACE CABLE, 3 W/FT, 120 V, POLYOLEFIN JACKET, SUITABLE FOR USE ON PEX AND ABS PIPING (MAX PIPE EXPOSURE TEMPERATURE 60 °C). HEAT TRACE CABLE TO BE INSTALLED ON ALL EXPOSED SECTIONS OF PIPING AND BURIED SECTIONS TO A DEPTH THAT SURPASSES THE FROST LINE; OTHERWISE, INSTALL TO A MINIMUM DEPTH OF 1220MM BELOW FINISHED GRADE.

36.2. CABLE TO BE INSTALLED PER MANUFACTURERS WIRING INSTRUCTIONS AND COMPLETE WITH ALL REQUIRED POWER-TERMINATION AND END-SEAL KITS FOR EACH CABLE RUN.

36.3. INSTALL HEAT TRACE CABLE IN CONTINUOUS RUNS WHEREVER POSSIBLE; AVOID UNNECESSARY SPLICES. SECURE CABLE TO PIPE USING FIBERGLASS TAPE AT MANUFACTURER RECOMMENDED INTERVALS WITH CAUTION LABELS APPLIED AT 3M INTERVALS. SENSOR BULB TO BE SECURED TO ASSOCIATED PIPE SURFACE UNDER INSULATION. TRANSITION FROM BUILDING WIRING TO HEAT-TRACE CABLE IN WEATHERPROOF PVC JUNCTION BOX USING APPROVED TERMINATION KITS. INSULATE ALL HEAT-TRACED PIPING WITH CLOSED-CELL INSULATION AND M

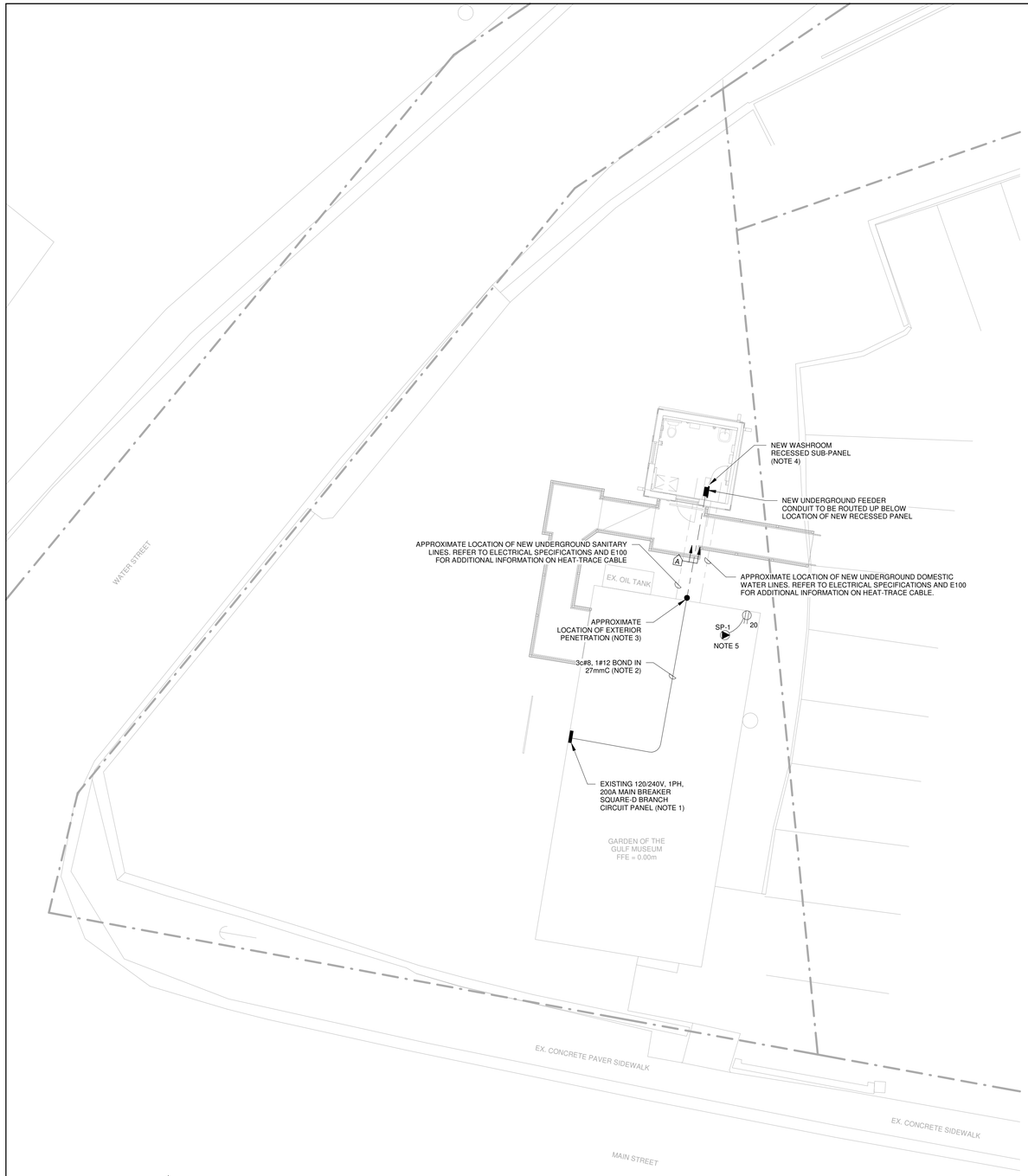

TRUE N / PROJECT N

3 / E002 SITE PLAN
1 : 100

GENERAL NOTES

- BRANCH CIRCUIT WIRING TO BE SIZED FOR A MAXIMUM VOLTAGE DROP OF 3%. 15A BRANCH CIRCUITS TO BE WIRED WITH #12 AWG CONDUCTOR UP TO 23m. #10 AWG CONDUCTOR UP TO 37m, AND #8 AWG UP TO 55m.
- CONDUIT AND CABLING PENETRATIONS THROUGH FIRE RATED SEPARATIONS ARE TO BE FIRE AND SMOKE SEALED TO MAINTAIN FIRE RATING OF THE SEPARATION THROUGH WHICH THEY PASS. REFER TO ARCHITECTURAL DRAWINGS FOR EXACT LOCATION OF FIRE RATED SEPARATIONS AND COORDINATE ELECTRICAL PENETRATIONS ON SITE.
- EXISTING CONDUCTOR AND CIRCUIT BREAKERS AND ELECTRICAL EQUIPMENT MAY BE REUSED AT THE CONTRACTORS DISCRETION IF DEEMED SUITABLE FOR THE INTENDED INSTALLATION AND IN ACCORDANCE WITH CSA 22.1-24; OTHERWISE, PROVIDE NEW.
- EXISTING FLOOR PLANS ARE ISSUED FOR INFORMATION ONLY AND SHOW MAJOR ITEMS ONLY. CONTRACTOR TO EXAMINE ALL DRAWINGS, VISIT THE SITE TO VERIFY EXISTING EQUIPMENT, CONDITIONS AND SCOPE OF WORK INVOLVED IN RENOVATION PRIOR TO SUBMITTING TENDER. EXTRAS WILL NOT BE CONSIDERED BECAUSE ACTUAL CONDITION DIFFER FROM DRAWINGS AND ALL COSTS RELATING TO EXISTING SITE CONDITIONS MUST BE INCLUDED IN THE TOTAL TENDER PRICE.

SHEET NOTES

1. SUPPLY AND INSTALL ONE (1) NEW 40A/2P BREAKER WITHIN A FREE CIRCUIT SPACE OF THE EXISTING 200A MB, 120/240V SQUARE-D BRANCH CIRCUIT PANELBOARD LOCATED WITHIN THE BASEMENT AREA OF THE EXISTING GARDEN OF THE GULF MUSEUM TO ACCOMMODATE THE INSTALLATION OF A NEW 40A, 120/240V RATED SUB-PANEL FOR THE NEW EXTERIOR WASHROOM. EXISTING PANEL DIRECTORY TO BE UPDATED TO ACCOUNT FOR THE ADDITIONAL CIRCUIT.
2. ROUTE 3C#8, 1#12 BOND IN A 27MC THROUGH THE OPEN CEILING SPACE OF THE BASEMENT AREA TO THE EXTERIOR WALL FOR EXTERIOR ROUTING TO THE NEW WASHROOM. EXACT ROUTING TO BE DETERMINED ON SITE AND PRIOR TO ROUGH IN. PROVIDE FOR ALL STRAPS AND SUPPORT STRUCTURES AS REQUIRED TO ENSURE THE NEW CONDUIT RACEWAY IS SUPPORTED IN ACCORDANCE WITH THE CEC.
3. NEW 27MM CONDUIT ASSOCIATED WITH THE NEW WASHROOM SUB-PANEL IS TO PENETRATE THROUGH AN EXISTING PLYWOOD BOARD INFILLING A DECOMMISSIONED BASEMENT WINDOW AND THEN ROUTED DOWN WITHIN NEW UNDERGROUND TRENCH AS DETAILED WITHIN DETAIL 2/E002. ALL EXTERIOR PENETRATIONS TO BE SEALED WITH LOW VOC MASTIC COMPOUND TO ENSURE THE EXISTING BUILDING ENVELOPE REMAINS WEATHER TIGHT. EXACT LOCATIONS TO BE DETERMINED AND COORDINATED WITH THE OWNER ON SITE AND PRIOR TO ROUGH IN.
4. NEW UNDERGROUND CONDUIT FEEDER TO BE ROUTED UP THROUGH THE NEW WASHROOM FLOOR SYSTEM, WITHIN THE INTERIOR OF THE CLOSET WALL FOR TERMINATION WITHIN THE ASSOCIATED RECESS MOUNTED SUB-PANEL. COORDINATE EXACT LOCATIONS AND PENETRATIONS ON SITE AND PRIOR TO ROUGH IN. PENETRATIONS THROUGH THE FLOOR SYSTEM TO BE PROPERLY SEALED TO MAINTAIN THE WEATHER RATING OF THE FLOOR AS INDICATED WITHIN THE ARCHITECTURAL DRAWINGS AND SPECIFICATIONS.
5. SEWAGE PUMP SP-1 TO BE LOCATED IN THE BASEMENT OF THE EXISTING BUILDING AND POWERED FROM NEW 20A RATED, 5-20R RECEPTACLE LOCATED ADJACENT TO THE UNIT. COORDINATE EXACT LOCATION WITH THE MECHANICAL CONTRACTOR ON SITE PRIOR TO ROUGH IN TO ENSURE THE RECEPTACLE IS WITHIN THE MAXIMUM CORD LENGTH. RECEPTACLE TO BE POWERED FROM A 20A, 1-POLE CIRCUIT BREAKER INSTALLED WITHIN A FREE SPACE OF THE EXISTING BUILDING BRANCH CIRCUIT PANEL.

GENERAL LEGEND

———	HEAVY LINEWEIGHT INDICATES NEW WORK
— — —	UNDERGROUND WIRING
———	SURFACE MOUNTED WIRING
———	LOW VOLTAGE WIRING
———	WIRING UP
———	WIRING DOWN
A-10a	INDICATES CIRCUIT #10 IN PANEL 'A' a - INDICATES LUMINAIRE SWITCHING FOR LIGHTING CIRCUITS
	GENERAL SUB SCRIPTS
A -	DEVICE MOUNTED 1220mm AFF OR 153mm ABOVE COUNTER
4x -	CSA 4x ENCLOSURE

POWER LEGEND

	DUPLEX RECEPTACLE
	RECEPTACLE SUB SCRIPTS
G -	GFCI RECEPTACLE
WP -	RECEPTACLE GFCI C/W WEATHER PROOF WHILE IN-USE COVER
XX	UNFUSED DISCONNECT SWITCH XX - INDICATES SWITCH RATING
	DIRECT CONNECTION
	SINGLE PHASE MOTOR
'A'	ELECTRICAL PANEL, SURFACE MOUNTED 'A' - INDICATES PANEL DESIGNATION
CMH-1	CEILING MOUNTED UNIT HEATER

INTRUSION & ACCESS CONTROL LEGEND

A	ACCESS CONTROL INTERFACE KEYPAD
D	ACCESS CONTROL / INTRUSION ALARM DOUBLE POLE DOOR CONTACT
	POWER ASSISTED DOOR PUSH BUTTON, SUPPLIED AND INSTALLED BY OTHERS, WIRED BY ELECTRICAL.
DO	POWER ASSISTED DOOR OPENER, SUPPLIED AND INSTALLED BY OTHERS, WIRED BY ELECTRICAL.
ES	ELECTRIC STRIKE, SUPPLIED AND INSTALLED BY OTHERS, WIRED BY ELECTRICAL.
DPS	DOOR HARDWARE POWER SUPPLY, SUPPLIED AND INSTALLED BY OTHERS. WIRED BY ELECTRICAL.

LIGHTING LEGEND

#	LUMINAIRE, WALL MOUNTED # - INDICATES TYPE IN LUMINAIRE SCHEDULE
#	LUMINAIRE, WALL MOUNTED # - INDICATES TYPE IN LUMINAIRE SCHEDULE
#	LUMINAIRE, SUSPENDED # - INDICATES TYPE IN LUMINAIRE SCHEDULE
	DUAL HEAD EMERGENCY LIGHTING UNIT
P	PIR OCCUPANCY SENSOR WALL SWITCH, 120V
PC	PHOTOCELL

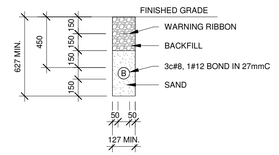

A BRANCH CIRCUIT CONDUIT

DETAIL NOTES:

1. B = BRANCH CIRCUIT CONDUIT. QUANTITY AND SIZE AS INDICATED.
2. BACKFILLING OF TRENCH IN LAYERS NOT EXCEEDING 300mm (MECHANICALLY TAMPED).
3. USE NEW SOIL FREE FROM LARGE ROCKS OR DEBRIS FOR BACKFILL.
4. IF SITE CONDITIONS PROHIBIT TRENCH AS PER THIS DRAWING, ADVISE CONSULTANT.
5. CONTRACTOR TO PROVIDE A MINIMUM OF 48 HOURS WRITTEN NOTICE TO UTILITY CONSTRUCTION INSPECTOR PRIOR TO SCHEDULED BACKFILLING OF WORK. BACKFILLING NOT PERMITTED UNTIL APPROVED BY UTILITY.
6. 6mm DIA. NYLON ROPE INSTALLED IN ALL DUCTS.
7. ALL CONDUITS TO BE LABELED WITH WEATHER PROOF TAGS INDICATION THE DESTINATION OF THE CONDUITS.

2 / E002 TRENCHING DETAILS
1 : 25

COLES
Architecture + Engineering + Project Management

Coles Associates Ltd.
Suite 201, 85 Fitzroy Street
Charlottetown, PE, Canada, C1A 1R6
Phone: (902) 368-2300
www.colesassociates.com

Seal:
PROFESSIONAL ENGINEER — The Association Of Professional Engineers Of Prince Edward Island
Alex C. Moore 2267
2026-11-05
Date
PROVINCE OF PRINCE EDWARD ISLAND

Client:
Town of Three Rivers

Project Title:
Heritage Museum Washroom & Walkway

564 Main St.
Montague, PE
C0A 1R0

Sheet Title:
Site Plan, Details & Legend

Rev. No.:	Issued for:	Date: (YYYY-MM-DD)
0	Permit	2026-11-05

Scale: As indicated
Drn By: CLS
Chk By: ACM
Rev. No.: 0
Project Number: 261155
Drawing Number: E002

THIS DRAWING AND ALL COPYRIGHT THEREIN ARE THE SOLE AND EXCLUSIVE PROPERTY OF COLES ASSOCIATES LTD. REPRODUCTION OR USE OF THIS DRAWING IN WHOLE OR IN PART BY ANY FORM WHATSOEVER WITHOUT THE PRIOR WRITTEN CONSENT OF COLES ASSOCIATES LTD. IS STRICTLY PROHIBITED.

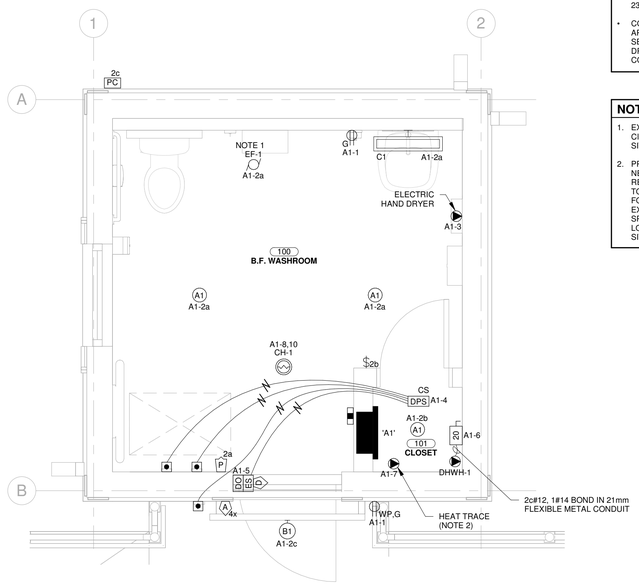

GENERAL NOTES

- BRANCH CIRCUIT WIRING TO BE SIZED FOR A MAXIMUM VOLTAGE DROP OF 3%. 15A BRANCH CIRCUITS TO BE WIRED WITH #12 AWG CONDUCTOR UP TO 23m. #10 AWG CONDUCTOR UP TO 37m, AND #8 AWG UP TO 55m.
- CONDUIT AND CABLING PENETRATIONS THROUGH FIRE RATED SEPARATIONS ARE TO BE FIRE AND SMOKE SEALED TO MAINTAIN FIRE RATING OF THE SEPARATION THROUGH WHICH THEY PASS. REFER TO ARCHITECTURAL DRAWINGS FOR EXACT LOCATION OF FIRE RATED SEPARATIONS AND COORDINATE ELECTRICAL PENETRATIONS ON SITE.

NOTES

1. EXHAUST FAN TO BE POWERED FROM THE LOAD SIDE OF THE AREA LIGHTING CIRCUIT. COORDINATE EXACT LOCATIONS AND WIRING REQUIREMENTS ON SITE WITH THE MECHANICAL CONTRACTOR PRIOR TO ROUGH-IN.
2. PROVIDE ONE (1) SINGLE RUN OF 3W/FT SELF-REGULATING HEAT TRACE FOR NEW DOMESTIC WATER LINES AND TWO (2) RUNS OF 3W/FT SELF-REGULATING HEAT TRACE ON NEW SANITARY DRAIN LINES AND WIRE BACK TO 153MM X 153MM PVC JUNCTION BOX, TO BE LOCATED WITHIN THE CLOSET FOR CONNECTION TO 120V POWER. HEAT TRACE TO BE WIRED THROUGH EXTERIOR THERMOSTAT CONTROLLER, REFER TO ELECTRICAL SPECIFICATIONS FOR ADDITIONAL INFORMATION. COORDINATE EXACT LOCATIONS AND INSTALLATION WITH THE MECHANICAL CONTRACTOR ON SITE AND PRIOR TO ROUGH IN.



1 / E100 LEVEL 1 - POWER, SYSTEMS & LIGHTING
1 : 25

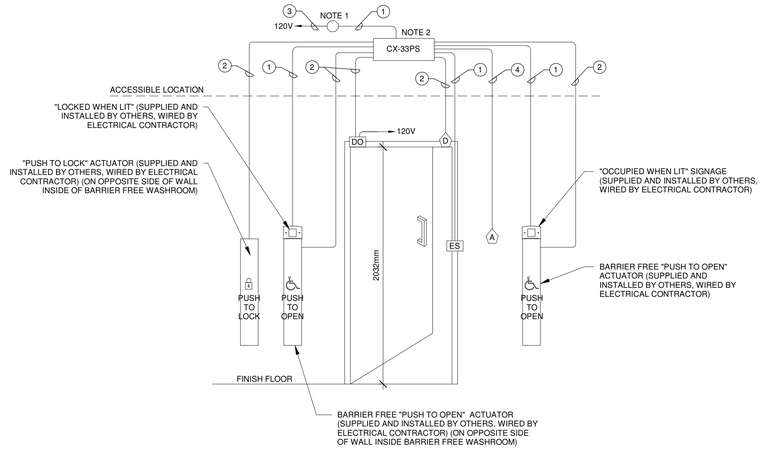

2 / E100 ACCESS CONTROL BARRIER FREE WASHROOM (TYP)
N.T.S.

NOTES:

1. CONTROL TRANSFORMER LOCATED IN A 153mm x 153mm x 102mm JUNCTION BOX LOCATED IN AN ACCESSIBLE LOCATION WITHIN CLOSET 101. CONTROL TRANSFORMER TO BE SUPPLIED AND INSTALLED BY OTHERS, WIRED BY ELECTRICAL CONTRACTOR.
2. CX-33 PS POWER SUPPLY TO BE SUPPLIED AND INSTALLED BY OTHERS, WIRED BY ELECTRICAL CONTRACTOR. POWER SUPPLY TO BE LOCATED IN AN ACCESSIBLE LOCATION WITHIN CLOSET 101.

THEORY OF OPERATION:

DOOR TO NORMALLY REMAIN CLOSED AND UNLOCKED DURING THE OWNER SPECIFIED HOURS OF OPERATION. PRESSING THE EXTERIOR "PUSH TO OPEN" PUSH PLATE OPENS BARRIER FREE WASHROOM DOOR AND ALLOWS ACCESS INTO BARRIER FREE WASHROOM. ONCE INSIDE BARRIER FREE WASHROOM AND THE DOOR IS CLOSED, PRESSING THE "PUSH TO LOCK" ENGAGES THE ELECTRIC STRIKE, LOCKS THE DOORS AND ILLUMINATES THE EXTERIOR ANNUNCIATOR TO SHOW "OCCUPIED WHEN LIT" AND INTERIOR ANNUNCIATOR TO SHOW "LOCKED WHEN LIT". LEAVING BARRIER FREE WASHROOM, PRESSING THE INTERIOR "PUSH TO OPEN" PUSH PLATE RELEASES THE ELECTRIC STRIKE, UNLOCKS THE DOOR, DEACTIVATES THE ILLUMINATED ANNUNCIATORS AND RESETS THE SYSTEM. IF THE DOOR IS OPENED MANUALLY TO EXIT THE BARRIER FREE WASHROOM, THE OVERHEAD MAGNETIC CONTACT SWITCH RESETS THE SYSTEM. OUTSIDE THE OWNER SPECIFIED HOURS OF OPERATION, THE DOOR IS TO REMAIN LOCKED WITH ALL FUNCTIONS DISABLED UNLESS AN AUTHORIZED CODE IS PRESENTED TO THE ACCESS CONTROL KEYPAD. UNRESTRICTED EGRESS TO BE MAINTAINED AND THE SYSTEM IS TO RESET VIA THE OVERHEAD MAGNETIC CONTACT SWITCH.

ITEM	WIRE DESCRIPTION	PART #
1	2c#18 AWG	PROVO #9182 OR EQUAL
2	2c#22 AWG	PROVO #Z222 OR EQUAL
3	2c#12 AWG	AC90
4	6c#22 AWG SHIELDED	PROVO #6706 OR EQUAL

MECHANICAL EQUIPMENT SCHEDULE

TYPE	DESCRIPTION	VOLTS	PHASE	RATED KW	RATED HP	AMPS	REMARKS
CH-1	CABINET UNIT HEATER	240	1	2	-	8.3	UNIT TO BE COMPLETE WITH INTEGRAL THERMOSTAT, SUPPLIED AND INSTALLED BY THE MECHANICAL CONTRACTOR AND WIRED BY ELECTRICAL. COORDINATE EXACT LOCATIONS AND CONNECTION REQUIREMENTS WITH THE MECHANICAL CONTRACTOR ON SITE AND PRIOR TO ROUGH IN.
DHWH-1	DOMESTIC HOT WATER HEATER	120	1	1.5	-	12.5	UNIT TO BE WIRED THROUGH LOCAL 120V, 20A RATED SWITCH ADJACENT TO THE UNIT. COORDINATE EXACT LOCATIONS AND CONNECTION REQUIREMENTS WITH THE MECHANICAL CONTRACTOR ON SITE AND PRIOR TO ROUGH IN.
EF-1	EXHAUST FAN	120	1	0.035	-	0.3	UNIT TO BE POWERED FROM THE LOAD SIDE OF THE AREA LIGHTING CIRCUIT. COORDINATE EXACT LOCATIONS AND CONNECTION REQUIREMENTS WITH THE MECHANICAL CONTRACTOR ON SITE AND PRIOR TO ROUGH IN.
SP-1	SEWAGE PUMP	120	1	0.8	-	8	UNIT TO BE POWERED FROM 20A RATED, 120V, 5-20R RECEPTACLE LOCATED ADJACENT TO THE PUMP AND WITHIN THE ASSOCIATED CORD LENGTH. COORDINATE EXACT LOCATIONS WITH THE MECHANICAL CONTRACTOR ON SITE PRIOR TO ROUGH-IN

LUMINAIRE SCHEDULE

TYPE	DESCRIPTION	LAMP	MOUNTING
A1	DEEP REGRESSED, 4" LED DOWNLIGHT, SMOOTH BAFFLE, WHITE, CCT AND LUMEN OUTPUT SELECTABLE, 120V DRIVER JUNO #WF4 DREG SM AL019 SWW5 90CRI MW M6 OR APPROVED EQUAL	LED 900 LUMENS 14.5W L70 @ 50,000H 90CRI 3500K	RECESSED WITHIN GYSPUM CEILING
B1	EXTERIOR GOOSE NECK FIXTURE, BLACK POLYESTER POWDER COATED MARINE GRADE FINISH, 120V, MEDIUM BASE SOCKET, 200W MAXIMUM ANPLIGHTING #Q-M712-E6-41 OR APPROVED EQUAL	LED BULB 60W EQUIVALENT 3500K	MOUTED TO EXTERIOR FAÇADE BACKBOX AND C/W LED BULB. EXACT LOCATION AND MOUNTING HEIGHT TO BE COORDINATED ON SITE PRIOR TO ROUGH IN
C1	2' LONG LED VANITY C/W EXTRUDED ACRYLIC DIFFUSER, BRUSHED NICKLE FINISH, 120V DRIVER, CCT SELECTABLE LITHONIA #FMVCCLS 24IN 30K35K40K 90CRI BN OR APPROVED EQUAL	LED 1800 LUMENS 27W L70 @ 50,000H 90CRI 3500K	WALL MOUNTED ABOVE BATHROOM MIRROR. EXACT LOCATION AND MOUNTING HEIGHT TO BE COORDINATEDON SITE PRIOR TO ROUGH IN

PANEL A1

VOLTS: 120/240V SINGLE
PHASES: 1
WIRES: 3
MAINS: 40A
LOCATION: CLOSET 101
NUMBER OF CIRCUITS: 18
MOUNTING: RECESSED
SOURCE: EXISTING MAIN BRANCH CIRCUIT PANEL

LGD	DESCRIPTION	BKR	P	CCT	A	B	A	B	CCT	P	BKR	DESCRIPTION	LGD
	RECEPT	15	1	1	240		140		2	1	15	LIGHTS	
	HAND DRYER	15	1	3		540		120	4	1	15	DOOR POWER SUPPLY	*
*	DOOR OPERATOR	15	1	5	120		1500		6	1	20	DHWH-1	
GFI	HEAT TRACE	15	1	7		1200		1000	8	2	15	CH-2	
	SPACE	--	1	9	--		1000		10				
	SPACE	--	1	11		--		--	12	1	--	SPACE	
	SPACE	--	1	13	--		--		14	1	--	SPACE	
	SPACE	--	1	15		--		--	16	1	--	SPACE	
	SPACE	--	1	17	--		--		18	1	--	SPACE	

	PHASE A	PHASE B
TOTAL PHASE LOADS:	3000	2860
TOTAL LOADS:	5860	
TOTAL AMPERAGE:	24	

LEGEND (LGD)
LOCKING BREAKER: (*)
ARC FAULT BREAKER: (A)
SWITCHING BREAKER: (SW)
GFCI BREAKER: (GFI)

COLES
Architecture + Engineering + Project Management
Coles Associates Ltd.
Suite 201, 85 Fitzroy Street
Charlottetown, PE, Canada, C1A 1R6
Phone: (902) 368-2300
www.colesassociates.com

Seal:
PROFESSIONAL ENGINEER
Province of Prince Edward Island
Alex C. Moore
2287
2026-11-05
Date

Client:
Town of Three Rivers

Project Title:
Heritage Museum Washroom & Walkway

564 Main St.
Montague, PE
C0A 1R0

Sheet Title:
Floor Plan, Details & Schedules

Rev. No.:	Issued for:	Date: (YYYY-MM-DD)
0	Permit	2026-11-05

Scale: As indicated
Drn By: CLS
Chk By: ACM
Rev. No.: 0
Project Number: 261155
Drawing Number: E100

THIS DRAWING AND ALL COPYRIGHT THEREIN ARE THE SOLE AND EXCLUSIVE PROPERTY OF COLES ASSOCIATES LTD. REPRODUCTION OR USE OF THIS DRAWING IN WHOLE OR IN PART BY ANY FORM WHATSOEVER WITHOUT THE PRIOR WRITTEN CONSENT OF COLES ASSOCIATES LTD. IS STRICTLY PROHIBITED.